No.01

Oki Data CONFIDENTIAL

C6150/C6050/C5950/ C5850/C5750/C5650 Maintenance Manual

[Rev. 5]

BOM		Use for		Certification Body	
Rev	Date	DCO No.	Contents	Design	Approval
2	2008-03-28	SAC-0023	Partical change	Kenji Sato	Shuichi Yamanaka
3	2008-10-07	SAC-0059	Drawing Maintenance	Masahiro Nakabayashi	Kenji Sato
4	2008-12-05	SG2-0014	Addition of “Warning”, etc.	Tomoyo Sugiyama	Yoshinori Fujisawa
5	2009-01-09	SG2-0021	Drawing Maintenance	Yoshinori Fujisawa	Yoshinori Fujisawa

Approval: Naoki Sunaga	Design: Makoto Kitamura	Name: C6150/C6050/C5950/ C5850/C5750/C5650 Maintenance Manual	
Check			
Date: 2007-08-23	**Oki Data Corporation**	Drawing No.: 43827101TH	1/251

Document Revision History

Rev.No.	Date	Corrected items			Person in charge
		No.	Page	Description of change	
1	2007-08-23			Issue	MDP12 N. Sunaga
2	2008-03-28			Partical change	CSFD12 K. Sato
3	2008-10-07		116, 178, 185, 218	Drawing maintenance	CSFD12 K. Sato
4	2008-12-05		50, 68, 69, 83	Addition of “Warning”, etc.	EP5 T. Sugiyama
5	2009-01-09			Drawing maintenance	EP5 Y. Fujisawa

PREFACE

This manual explains the maintenance methods for the C6150/C6050/C5950/C5850/C5750/C5650. The manual has been prepared for use by the maintenance personnel. For operating methods of the C6150/C6050/C5950/C5850/C5750/C5650, refer to the corresponding user's manual.

Note!
- The contents of this manual are subject to changes without prior notice.
- Despite that exhaustive efforts were made in preparing the manual to make it accurate, it still may contain errors. Oki Data will not hold itself liable for any damage that results or is claimed to have resulted from repair, adjustment, or modification of the printer conducted by the user using this manual.
- The parts employed in the printer are so delicate that they may be damaged if not treated properly. Oki Data strongly recommends that the maintenance of the printer be undertaken by Oki Data's registered maintenance personnel.
- Work after eliminating static electricity.

CONTENTS

1. CONFIGURATION 8

1.1 System configuration 8
1.2 Printer configuration 10
1.3 Composition of optional items 12
1.4 Specifications 13
1.5 Interface specifications 17
1.5.1 Parallel interface specifications 17
1.5.1.1 Parallel Interface Overview 17
1.5.1.2 Parallel Interface Connector and Cable 17
1.5.1.3 Parallel Interface Level 17
1.5.1.4 Timing Chart 18
1.5.1.5 Parallel Interface Signal 19
1.5.2 USB interface specifications (C6150/C6050/C5950/C5850/C5750/C5650) 20
1.5.2.1 Outline of USB interface 20
1.5.2.2 USB interface connectors and cables 20
1.5.2.3 USB interface signals 20
1.5.3 Network interface specifications (C6150/C6050/C5950/C5850/C5750/C5650) 21
1.5.3.1 Outline of network interface 21
1.5.3.2 Network interface connectors and cables 22
1.5.3.3 Network interface signals 22

2. EXPLANATION OF OPERATION 23

2.1 Electrophotographic processing mechanism 23
2.2 Printing process 28

3. INSTALLATION 38

3.1 Cautions, and do's and don'ts 38
3.2 Unpacking method 40
3.3 Printer Installation Instructions 41
3.4 Listing of component units and accessories 42
3.5 Assembling method 43
3.5.1 Assembly of printer main body 43
3.5.2 Connection of power cable 49
3.5.3 Installation of optional items 52
3.5.4 Confirmation of recognition of optional items 61
3.6 Menu Map print 62
3.7 Connection methods 64
3.8 Confirmation of paper used by the user 67

4. REPLACEMENT OF PARTS 68

4.1 Precautions on the replacement of parts 68
4.2 Part replacement methods 70
4.2.1 Left side cover 70
4.2.2 Right side cover 71

4.2.3 Face-Up Tray 72
4.2.4 Rear cover 73
4.2.5 LED Assy/LED Assy springs 74
4.2.6 CU PCB 75
4.2.7 Print engine controller PCB 77
4.2.8 Top cover assembly 79
4.2.9 Top cover 80
4.2.10 Controller Panel Assy 81
4.2.11 Operator panel PCB/ Top Cover Handle 82
4.2.12 Low-Voltage Power Supply / Low-Voltage Fan / Hopping Motor / Fuser Motor 83
4.2.13 Guide Eject Assy / Color Register Assy / Junction PCB 85
4.2.14 Fan (Fuser)/ Belt Motor / High-Voltage Power Supply Board / Cover-Open Switch . 87
4.2.15 MPT Assy 88
4.2.16 Feeder Unit / Front sensor PCB/ MPT Hopping Roller / Frame Assy Separator / Cover Front 89
4.2.17 Toner sensor PCB Lift-Up Motor/Solenoid/Paper-End Sensor 90
4.2.18 Feed Roller 92
4.2.19 Shaft Eject Assy(FU) / Shaft Eject Assy(FD) / Eject Sensor 93
4.2.20 Fuser Unit 94
4.2.21 Belt Unit 95
4.3 Lubricating points 96

5. MAINTENANCE MENUS 114

5.1 System maintenance menu (For maintenance personnel) 114
5.2 Maintenance utility 117
5.3 Functions of user's maintenance menu 121
5.3.1 Maintenance menu (For end users) 121
5.3.2 Self-diagnostic mode 123
5.3.2.1 Operator panel 123
5.3.2.2 Normal self-diagnostic mode (Level 1) 126
5.3.2.2.1 Activation method for self-diagnostic mode (Level 1) 127
5.3.2.2.2 Deactivation of self-diagnostic mode 127
5.3.2.3 Switch scan test 127
5.3.2.4 Motor clutch test 130
5.3.2.5 Test print 132
5.3.2.6 Color registration adjustment test 137
5.3.2.7 Print density adjustment test 138
5.3.2.8 Indication of consumable part counters 140
5.3.2.9 Indication of printed page counters 141
5.3.2.10 Factory/Shipping switching 141
5.3.2.11 Setup of self-diagnostic function 142
5.3.2.12 Indication of LED head serial number 143
5.3.2.13 Details of panel indications 144
5.3.3 Various types of print on the individual printer equipped with controller 155
5.3.4 Functions of keys when depressed at power-on 155

5.4 Setup after replacement of parts 156
5.4.1 Precautions on the replacement of engine control PCB 156
5.4.2 Setup of EEPROM after replacement of CU PCB 159
5.4.2.1 Replacement of EEPROM after replacement of PDL CU PCB (C6150/C6050/C5950/C5750) 159
5.4.2.2 Setup of CU Serial Number 159
5.4.3 Setup of destination [Checking method: Menu Map Print (C6150/C6050/C5950/C5850/C5750/C5650)] 160
5.5 About the manual setup of Print density adjustment 161

6. PERIODICAL MAINTENANCE 162

6.1 Recommended replacement parts 162
6.2 Cleaning 162
6.3 Cleaning of LED lens array 162
6.4 Cleaning of pickup rollers 164
6.5 Internal cleaning of printer 165
Cleaning the interior of the printer. 165

7. TROUBLESHOOTING PROCEDURES 167

7.1 Precautions prior to repair 167
7.2 Items to be checked prior to taking action on abnormal images 167
7.3 Precautions when taking action on abnormal images 167
7.4 Preparations for troubleshooting 167
7.5 Troubleshooting method 167
7.5.1 LCD Message List 168
7.5.2 Preparing for troubleshooting 184
7.5.2.(1) LCD Display Malfunction 186
7.5.2.(2) Irregular Operation of the device after turning on the power 189
7.5.2.(3) Paper Feed Jam(Error 391:1st Tray) 199
7.5.2.(4) Paper Feed Jam (Error 390:Multi-purpose Tray) 201
7.5.2.(5) Paper Path Jam(Error 381) 203
7.5.2.(6) Paper Exit Jam(Error 382) 208
7.5.2.(7) Duplex Print Jam(Error 370,371,372,373,383) 211
7.5.2.(8) Paper Size Error (Error 400) 213
7.5.2.(9) ID Unit Up-Down Error(Service Call 140-143) 214
7.5.2.(10) Fuser Unit Error(Error 170-177) 216
7.5.2.(11) Motor Fan Error(Error 120,127,051) 217
7.5.2.(12) Print Speed is Slow (Low Performance) 218
7.5.2.(13) Option unit is not recognized 218
7.5.2.(14) LED head is not recognized(Error 131,132,133,134) 219
7.5.2.(15) Toner cartridge is not recognized(Error 540,541,542,543) 220
7.5.2.(16) Fuse Cutout Error (Error 150-155) 221
7.5.2.(17) Dew Condensation Errors (Error 123) 222
7.5.3 Image Problem Troubleshooting 223
7.5.3.(1) Color is totally pale (Fig.7.2 A) 224
7.5.3.(2) Background is dirty (Fig.7.2 B) 225

7.5.3.(3) Blank Print (Fig.7.2 C) 226
7.5.3.(4) Vertical lines are printed 227
7.5.3.(5) Cyclic Print Trouble (Refer to Fig.7.2 E) 228
7.5.3.(6) Color registration is wide. 229
7.5.3.(7) Solid Black Print 230
7.5.4 Actions after forced initialization of HDD/Flash 231
7.5.5 Network Troubleshooting 232
7.6 Check of fuses 233
8. CONNECTION DIAGRAMS 234
8.1 Check of resistance values 234
8.2 Component layout 238
8.3 F/W version 250
8.3.1 ROM management number 250
8.3.2 F/W version display in PDL CU PCB 250
8.3.3 Stamped maintenance board parts markings 251

1. CONFIGURATION

1.1 System configuration

C6150/C6050/C5950/C5750

Figure 1-1-1 represents the system configuration of the printer.

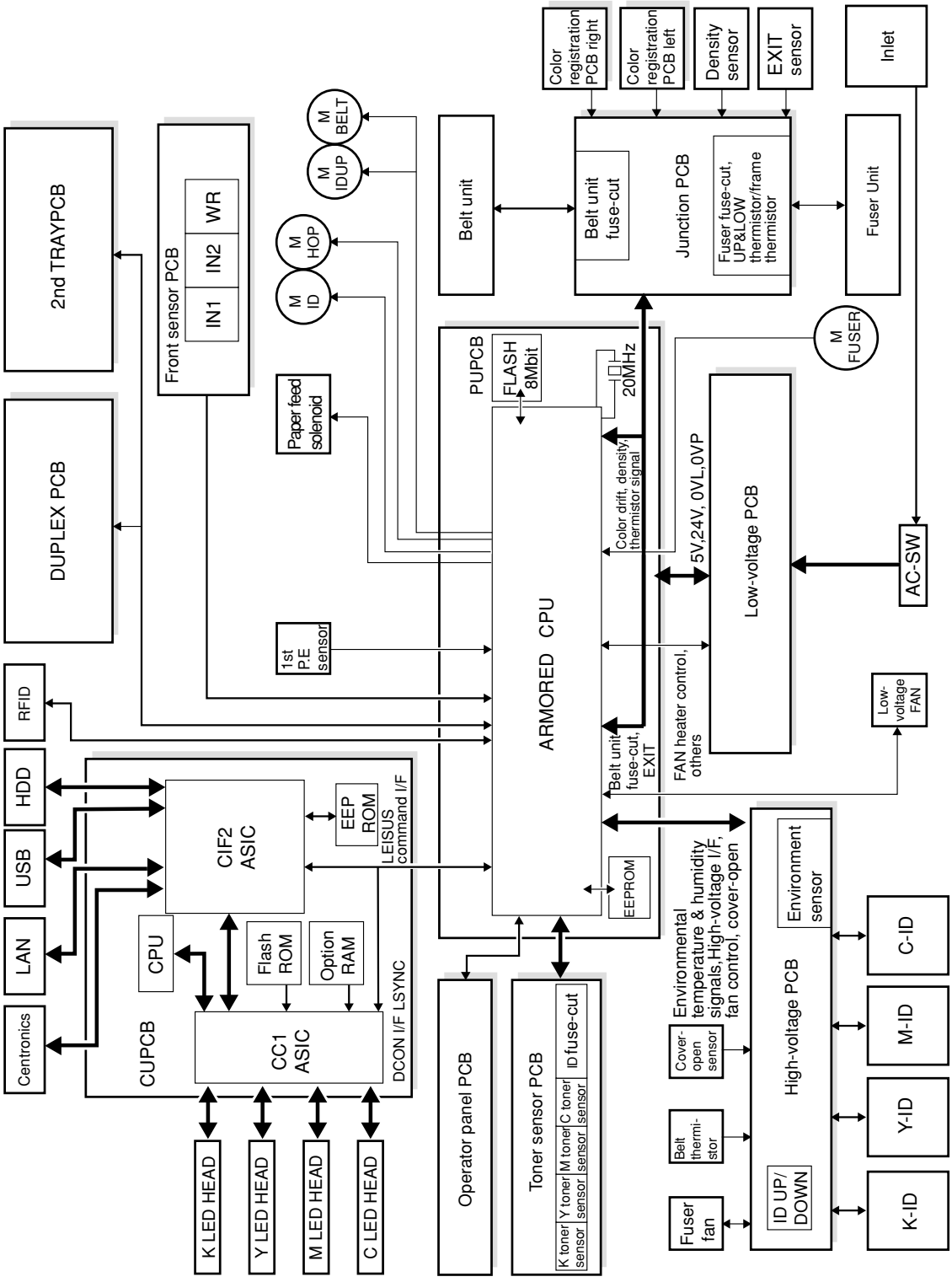

Figure 1-1-1

C5850/C5650

Figure 1-1-2 represents the system configuration of the printer.

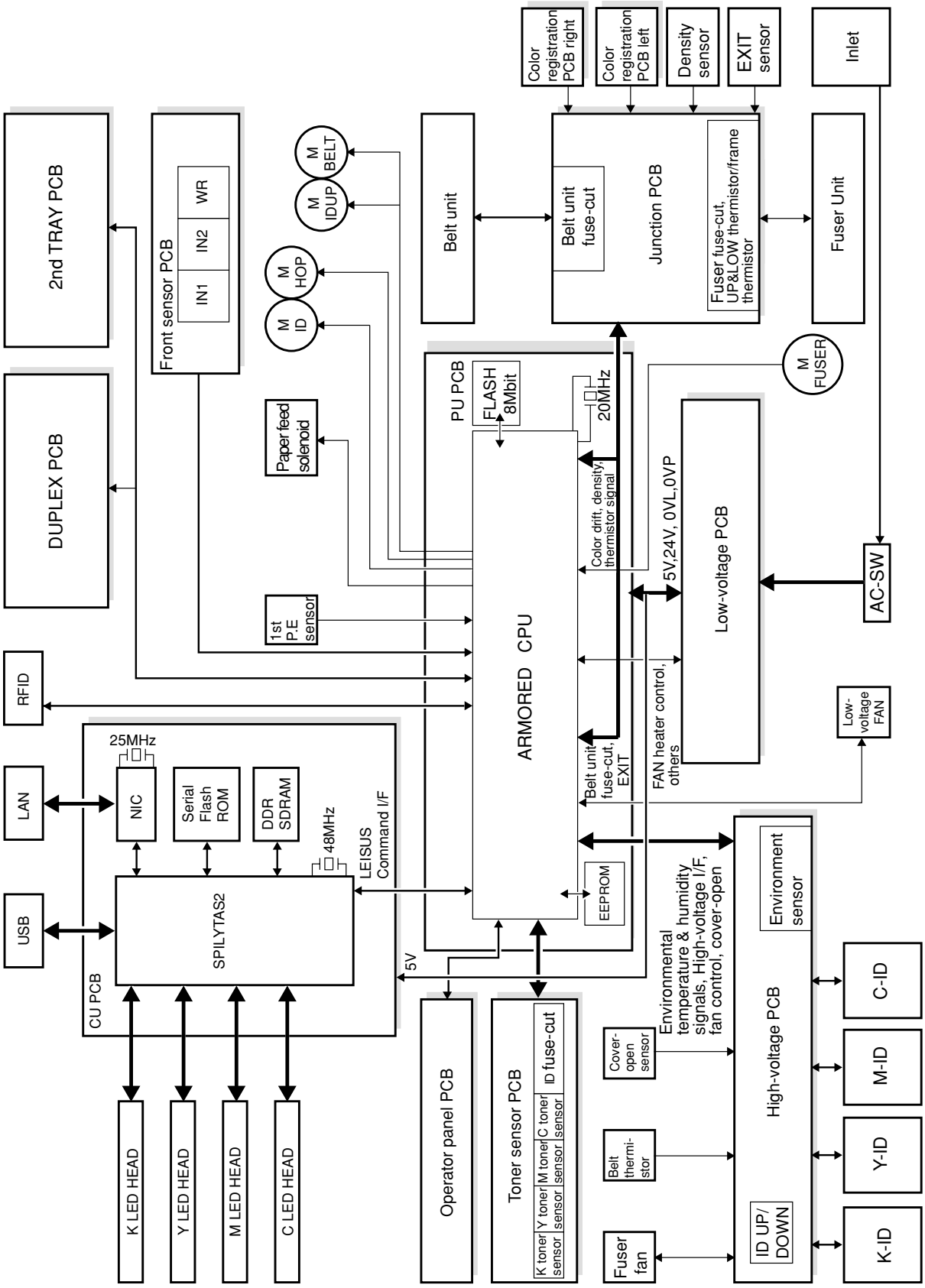

Figure 1-1-2

1.2 Printer configuration

The internal part of the C6150/C6050/C5950/C5750 printer is composed of the following sections:

- Electrophotographic processing section
- Paper paths
- Control sections (CU sect./PU sect.)
- Operator panel
- Power supply sections (High-voltage sect./low-voltage sect.)

Figure 1-2-1 represents the configuration of the printer.

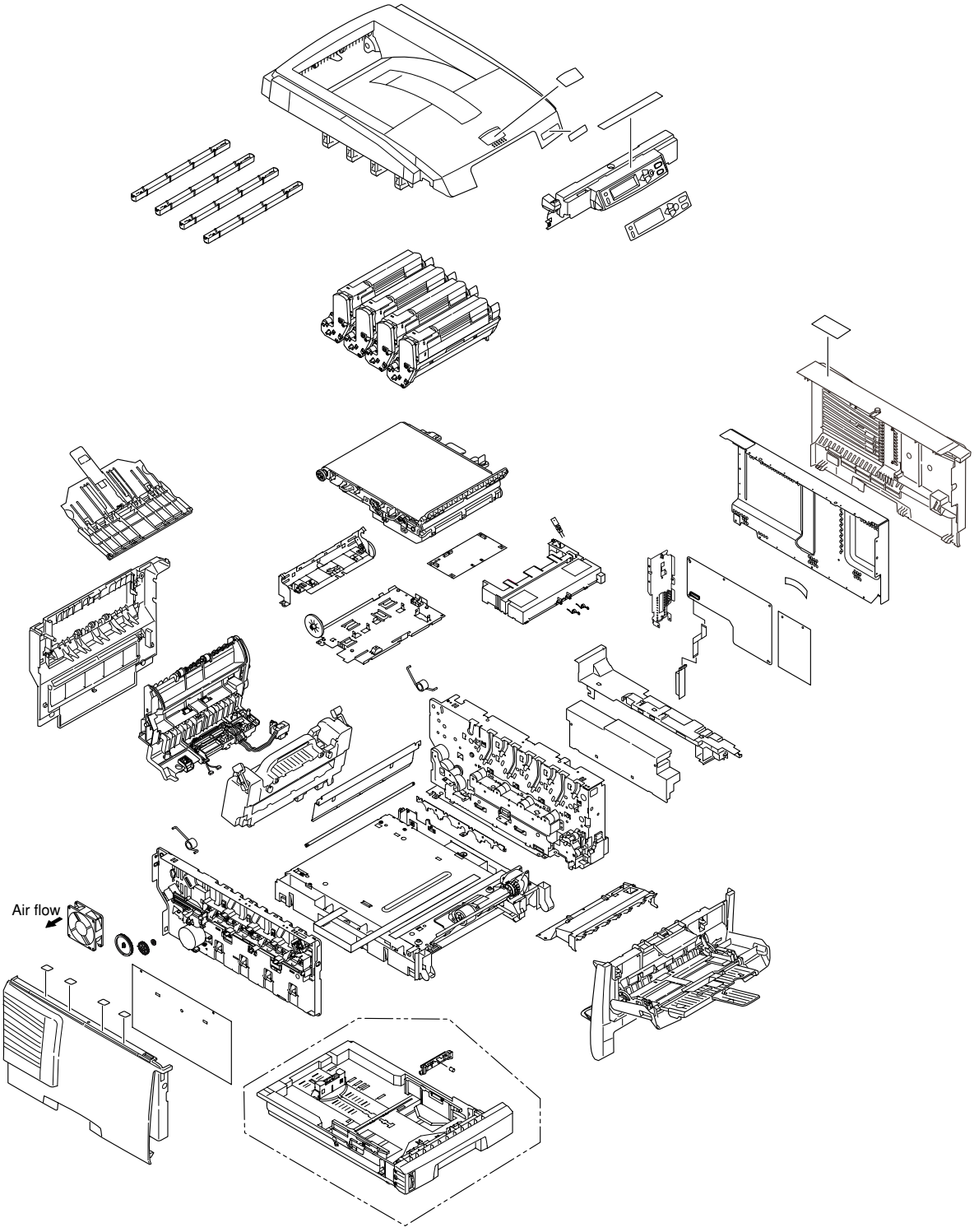

Figure 1-2-1

The internal part of the C5850/C5650 printer is composed of the following sections:

- Electrophotographic processing section
- Paper paths
- Control sections (CU sect./PU sect.)
- Operator panel
- Power supply sections (High-volatge sect./low-voltage sect.)

Figure 1-2-2 represents the configuration of the printer.

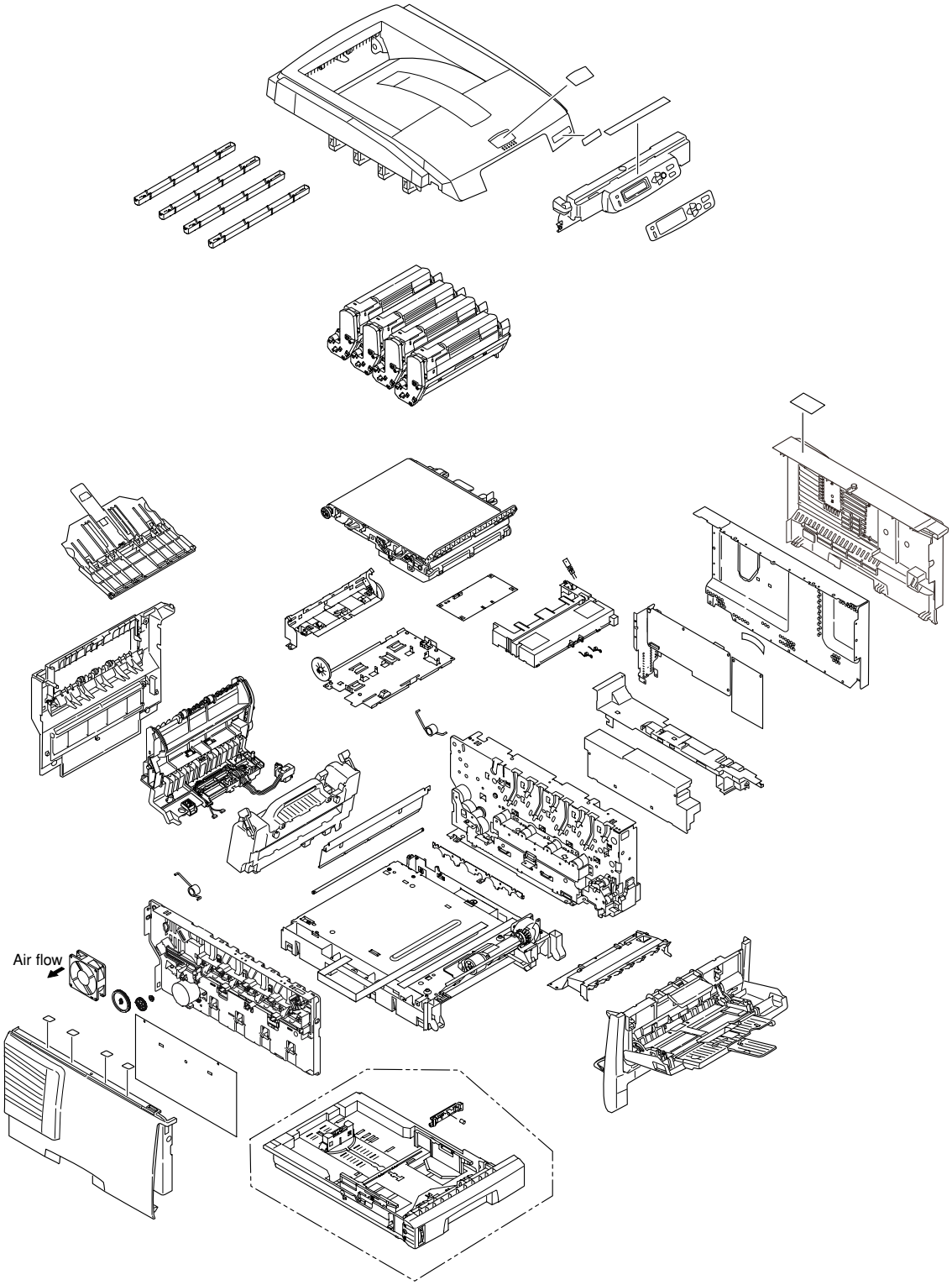

Figure 1-2-2

1.3 Composition of optional items

The following optional items are available for the printer:

(1) Second tray (C6150/C6050/C5950/C5850/C5750/C5650)

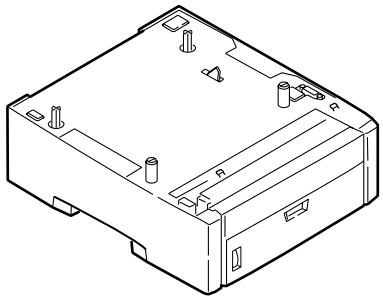

(2) Duplex Unit (C6150/C6050/C5950/C5850/C5750/C5650)

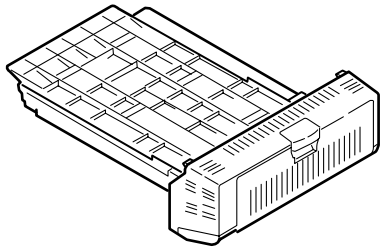

(3) Expansion Memory (C6150/C6050/C5950/C5750) 256 MB / 512 MB
For long printing, it is recommended to add an expansion memory.
* Not compatible with the expansion memories for C5850/C5650.

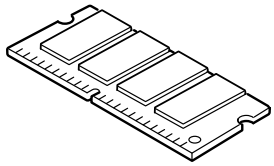

(4) Expansion Memory (C5850/C5650) 64 MB / 256 MB
* Not compatible with the expansion memories for C6150/C6050/C5950/C5750.

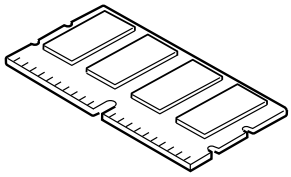

(5) Hard disk (C6150/C6050/C5950/C5750)

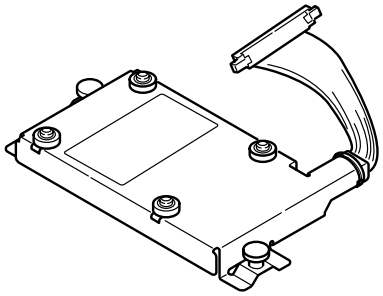

1.4 Specifications

Division	Item		C5850	C5650	C6150	C5950	C6050	C5750
			32/26ppm	32/22ppm	32/26ppm	32/26ppm	26/22ppm	32/22ppm
External dimensions	Width		435mm					
	Depth	With duplex	621mm					
		Without duplex	563.5mm					
	Height		340mm					
	Mass	With duplex	Approx.29kg					
		Without duplex	Approx.26kg					
Print width	Print width		A4					
Engine speed (A4)	Monochrome		32ppm	32ppm (Default:26ppm)	32ppm		32ppm (Default:26ppm)	
	Color		26ppm	22ppm	26ppm		22ppm	
	OHP Color		9ppm*1	9ppm*1	9ppm*1		9ppm*1	
	OHP color/ mono-chrome		10ppm	10ppm	10ppm		10ppm	
First print time(A4)	Monochrome		8sec	8sec (Default:10sec)	8sec		8sec (Default:10sec)	
	Color		9sec	11sec	9sec		11sec	
	Warm-up time		45sec					
	Low-noise mode		Not applicable					
Resolution	LED head		600dpi					
	Max. input resolution		600x1200dpi					
	Output resolution		True 600x1200dpi True 600x600dpi		True 600x1200dpi True 600x600dpi			
	Gradation		600x600x4 level					
	Econo-mode		Toner-saving by reducing lightness					
CPU	Core		PowerPC405		PowerPC750CL			
	I-cache		16KB,		32KB			
	D-cache		16KB		32KB (Internal L2 : 256KB)			
	Clock		200MHz		500MHz			
	Bus width		32bit		64bit			
RAM	Resident		64 MB		256 MB			
	Option		64/256MB DIMM		256/512MB DIMM			
ROM	Program + font		Total capacity: 8MB		Total capacity: 64MB			
Power con-sumption	Power input		(120V)110~127VAC , (230V)220~240VAC					
	Power-save mode		15W or less		17W or less			
	Idle		100W (Average)					
	Normal operation		490W					
	Peak		1200W					
Operating environment (Temperature)	When operating		10°C~32°C, 17°C~27°C(Full-color print quality guarantee temperature)					
	When not operating		0°C~43°C, Power off					
	When stored (For max. 1 yr.)		-10°C~43°C, With drum and toner					
	When transported (For max. 1 mo.)		-29°C~50°C, With drum, but no toner					
	When transported (For max. 1 mo.)		-29°C~50°C, With drum and toner 20%~80%, 50%~70%(Full-color print quality guarantee humidity)					
Operating environment (Humidity)	When operating		Max. wet-bulb temp. : 25°C					
	When not operating		10%~90%, Max. wet-bulb temp. : 26.8°C, with power off					
	When stored		10%~90%, Max. wet-bulb temp. : 35°C					
	When transported		10%~90%, Max. wet-bulb temp. : 40°C					

Division	Item		C5850	C5650	C6150	C5950	C6050	C5750
			32/26ppm	32/22ppm	32/26ppm	32/26ppm	26/22ppm	32/22ppm
Service life	Printer life		420,000 pages, 5 years					
	Print duty (M=L/12, A=L/12/5)		Max. 50,000 pages / mo. Average 4,000 pages / mo.					
	MTBF (2.3% duty)		Not applicable					
	MPBF		40,000 pages					
	MTTR		20 minutes					
	Toner life (5% Duty)	Starter toner	Approx. 1500 pages (Black) Approx. 1500 pages (Color)	Approx. 1500 pages (Black) Approx. 1500 pages (Color)	Approx. 2000 pages (Black) Approx. 2000 pages (Color)	Approx. 1500 pages (Black) Approx. 1500 pages (Color)	Approx. 2000 pages (Black) Approx. 2000 pages (Color)	Approx. 1500 pages (Black) Approx. 1500 pages (Color)
		Standard	Approx. 8000 pages (Black) Approx. 6000 pages (Color)	Approx. 8000 pages (Black) Approx. 2000 pages (Color)	Approx. 8000 pages (Black) Approx. 6000 pages (Color)	Approx. 8000 pages (Black) Approx. 6000 pages (Color)	Approx. 5000 pages (Black) Approx. 4000 pages (Color)	Approx. 8000 pages (Black) Approx. 2000 pages (Color)
		With 1st new drum	Approx. 7200 pages (Black) Approx. 5200 pages (Color)	Approx. 7200 pages (Black) Approx. 1200 pages (Color)	Approx. 7200 pages (Black) Approx. 5200 pages (Color)	Approx. 7200 pages (Black) Approx. 5200 pages (Color)	Approx. 4200 pages (Black) Approx. 3200 pages (Color)	Approx. 7200 pages (Black) Approx. 1200 pages (Color)
	Image drum life		Approx.20,000 pages (With 3 pages / job) Approx.12,000 pages (With 1 page / job) Approx.27,000 pages (When printed continuously) Drum counter automatically reset					
	Transfer belt life		60,000 pages (A4 size, with 3 pages / job), counter automatically reset					
	Fuser unit life		60,000 pages (A4 size), counter automatically reset					
Operation noise	In operation (ISO7779Front) In one-side print		55.6dBA					
	On standby (ISO7779Front)		37dBA					
	Power-save mode		Background level					
Paper handling	Paper capacity (1st tray)		Legal/universal cassette: 300 sheets (70kg)					
	Paper capacity (2nd tray)		Legal/universal cassette (Optional): 530 sheets (70kg)					
	Paper capacity (Manual/auto)		Standard multi-purpose tray: 50 OHP sheets or 100 sheets of paper (70kg) or 10 envelopes					
	Delivery		250 sheets (70kg) face-down/100 sheets (70kg)face-up in tray					
	Duplex		Standard / optional (Depending on specification)					
Paper size	Legal / universal or A4-size cassette / universal cassette		1st cassette: Legal13/13.5/14, letter, executive, A4, A5, B5, A6 2nd cassette: Legal13/13.5/14, letter, executive, A4, A5, B5 Reply-paid postcard (Max. 176gsm) (Multi-purpose tray)					
	Automatic front feeder or manual feeder		Legal13/13.5/14, letter, executive, A4, A5, B5, A6, C5, DL, Com-9,Com-10, Monarch, custom size, banners up tp 1220mm (When paper length exceeds 356, its width shall be from 210 to 215.9.)					
	Two-sided		Legal13/13.5/14, letter, executive, A4, A5 Custom size (Within permissible size and weight)					
Min. paper size	1st tray		105x148mm:A6/(Models for Japan [100x148: Postcard size])					
	2nd tray		148x210mm:A5					
	Manual & auto (MPT)		76.2x127 : Index Card					
	Two-sided		148x210mm:A5					

Division	Item	C5850	C5650	C6150	C5950	C6050	C5750
		32/26ppm	32/22ppm	32/26ppm	32/26ppm	26/22ppm	32/22ppm
Paper thickness	1st tray	64~120gsm					
	2nd tray	64~176gsm					
	Manual & auto (MPT)	64-203gsm OHP sheets available					
	Two-sided	64~105gsm					
Operator panel	LCD	16 characters in 2 line (Roman alphabet/Japanese kana) No paper size indicated					
	LED (Color)	Two (Green x1, dark amber x1)					
	Switch	Six					
Status switch/ sensor	Paper out	Provided					
	Paper low	Not provided					
	Toner low	Provided (Y,M,C,K)					
	Cover open	Provided					
	Fuser unit temp.	Provided					
	Paper size	Not provided					
	Stacker full	Not provided					
	Standard (On PCB)	• Hi-Speed USB • Ethernet					
	Additional Function	Not available		Bidirectional parallel I/F conforming to IEEE std1284-1994			
	Input/output switch	Automatic					
Emulation	Standard	Hiper-C		PCL (PCL5c, HP-GL) / PCL XL2.1 SIDM (IBM-PPR, EPSON-FX) PostScript3 (Clone) PDF Direct Print1.5			
	Emulation switch	Not provided		Automatic			
Font	Bit-map type face	Not available		Agfa 1(Line printer)			
	Scalable 1 type face	Not available		Agfa micro-type 86			
	Scalable 2 type face	Not available					
	Scalable 3 type face	Not available		Agfa micro-type 136			
	Rasterizer	Not available		Agfa UFST 4.0 (PCL)			
	Bar code	Not available		USPS			
	OCR	Not available		OCR-A,B			
	Japanese PCL font	Not available					
	Japanese PS font	Not available					

Division	Item	C5850	C5650	C6150	C5950	C6050	C5750
		32/26ppm	32/22ppm	32/26ppm	32/26ppm	26/22ppm	32/22ppm
Optional Item (Detacchable)	RAM set	64, 256 MB		256, 512 MB			
	Tray mechanism	2nd tray mechanism					
	Cassette	Legal/universal (530 sheets)					
	Two-sided print unit	Available					
	Othes	Not applicable		2.5" IDE HDD User- installable			
Factory settings	Japan	GDI Model		PCL+PS model			
Others	USB-IF logo	Available					
	Windows logo	Available					
	Operation with UPS	Operation with UPS (Uninterruptible power supply) is not guaranteed. Do not use UPS					

Note! Expansion memories for C5850/C5650 and those for C6150/C6050/C5950/ C5750 are not compatible with each other.

1.5 Interface specifications

1.5.1 Parallel interface specifications

1.5.1.1 Parallel Interface Overview

Item	Details
Corresponding mode	Comatible mode, nibble mode, ECP mode
Data bit length	Compatible: 8, Nibble: 4, ECP: 9 bit

1.5.1.2 Parallel Interface Connector and Cable

(1) Connector

Printer: 36pConnector (Female)

57LE-40360-12 (D56) (DDK Ltd.) equivalent product

Cable: 36pConnector (Male)

57FE-30360-20N (D8) (DDK Ltd.) equivalent product

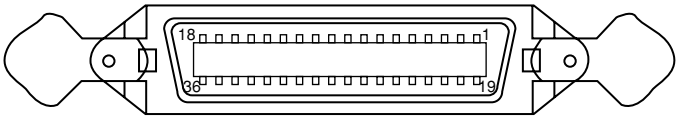

Pin arrangement from interface cable side

(2)Cable

Use a cable shorter than 1.8m.

(Use a cable with a shielded twisted-pair wire for to prevent noise interference.)

1.5.1.3 Parallel Interface Level

Low Level: 0.0V to +0.8V

High Level: +2.4V to +5.0V

1.5.1.4 Timing Chart

■ Compatible Mode

a) Data Reception Timing

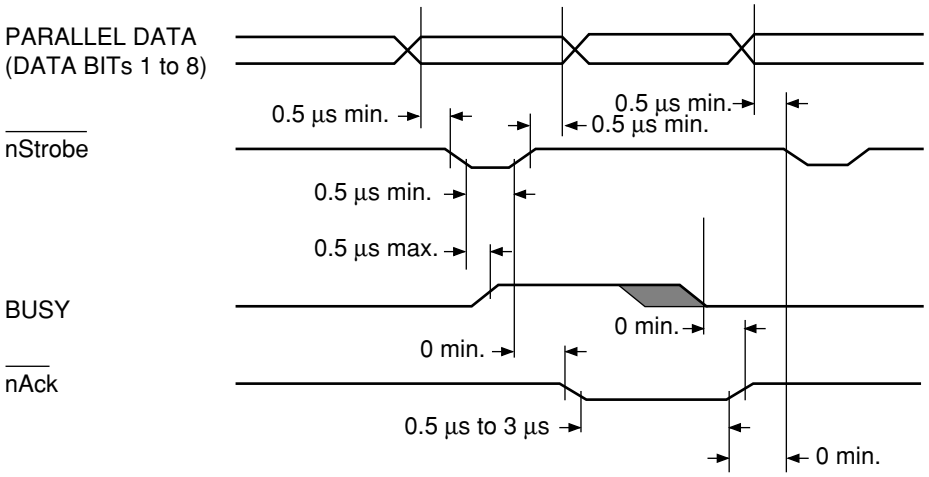

b) Online/Online SW for Offline Switching Timing

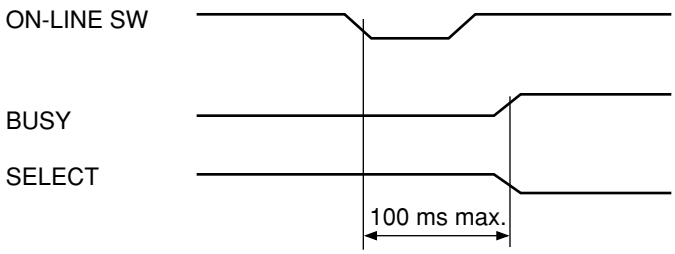

c) Offline/Online SW for Online Switching Timing

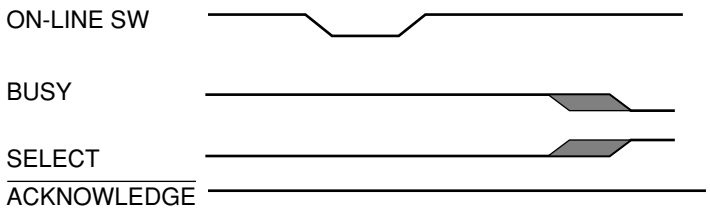

d) nInit Timing (Default Invalid)

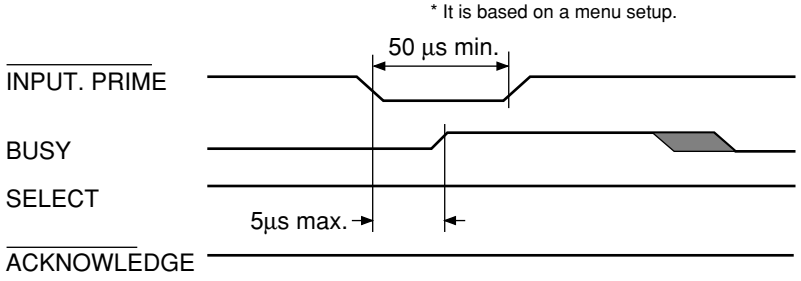

1.5.1.5 Parallel Interface Signal

The name of the interface signal and pin number is indicated in Table 9-1.

Table 1-1 Signals

Pin No.	Signal Name	Direction	Function
1	nStrobe (HostClk)	TO PRINTER	Pulse to read data. Data is read with the latter wire.
2	DATA 1	TO PRINTER	8bit parallel data. High Level: "1" Low Level: "0"
3	DATA 2		
4	DATA 3		
5	DATA 4		
6	DATA 5		
7	DATA 6		
8	DATA 7		
9	DATA 8		
10	nAck (PtrClk)	FROM PRINTER	Signal indicating completion of incoming data.
11	Busy (PtrBusy)	FROM PRINTER	Indicates whether the printer state can accept data or not. Data cannot be accepted during High Level.
12	PError (AckDataReq)	FROM PRINTER	Paper error takes place during High Level.
13	Select (Xflag)	FROM PRINTER	Always High Level when the parallel interface is active.
14	nAutoFd (HostBusy)	TO PRINTER	Used for two-way communications.
15	Unused	—	Unconnected
16	GND	—	Ground for signal.
17	FG	—	Ground for chassis.
18	+5V	FROM PRINTER	Provides +5V. Cannot supply power to an external device.
19 to 30	GND	—	Ground for signal.
31	nInit (nInit)	TO PRINTER	Printer is initialized during Low Level.
32	nFault (nDataAvail)	FROM PRINTER	When printer is alarming the printer goes to Low Level state.
33	GND	—	The ground for signals
34	Unused	—	Un-connecting.
35	HILEVEL	FROM PRINTER	It is pulled up by +5V through 3.3kΩ.
36	nSelectIn (IEEE1284 active)	TO PRINTER	Used for two-way communications. Always in Low Level in the compatible mode.

Note Nibble mode signal names are indicated in the ( ).

Only indicates the Compatible Mode functions.

This printer supports the IEEE 1284-1994 Nibble Mode standardized by the Institute of Electric and Electronic Engineers (IEEE). Note that use of PCs and cables that do not comply with this standard may result in unforeseeable operations.

1.5.2 USB interface specifications (C6150/C6050/C5950/C5850/C5750/C5650)

1.5.2.1 Outline of USB interface

(1) Basic specifications
USB (Hi-Speed USB supported)

(2) Transmission mode
Full speed (Max. 12Mbps ± 0.25%)
High speed (Max.480Mbps ± 0.05%)

(3) Power control
Self power device

1.5.2.2 USB interface connectors and cables

(1) Connector

- Printer side: B-receptacle (Female)
  Upstream port
  Product equivalent to UBR24-4K5C00 (Made by ACON)

Connector pin assignment

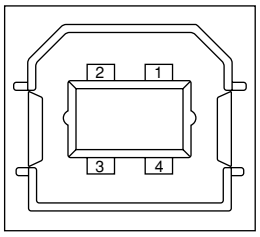

- Cable side: B-plug (Male)

(2) Cables

Cable length: Specification: USB2.0 type cables five meters long or shorter. Cables two meters long or shorter are recommended. (Shielded cable lines shall be used.)

1.5.2.3 USB interface signals

	Signal name	Function
1	Vbus	Power supply (+5V)
2	D-	For data transfer
3	D+	For data transfer
4	GND	Signal ground
Shell	Shield	

1.5.3 Network interface specifications (C6150/C6050/C5950/C5850/C5750/C5650)

1.5.3.1 Outline of network interface

1.5.3.1.1 Basic specifications of network interface (C5850/C5650)

Protocol family	Network protocol	Application
TCP/IP	IPv4, TCP, ICMP, ARP, UDP	LPR, RAW, IPP, FTP, Telenet SNMPv1 DHCP/BOOTP DNS UPnP Rendezvous SNTP

1.5.3.1.2 Basic specifications of network interface (C6150/C6050/C5950/C5750)

Protocol family	Network protocol	Application
TCP/IP	IPv4, IPv6, TCP, UDP, ICMP, ICMPv6, ARP	LPR, RAW, IPP, FTP SMTP/POP3 HTTP HTTPS Telenet SNMPv1/v3 DHCP/BOOTP DNS UPnP Rendezvous SNTP
NetBEUI	NetBIOS	WINS, SMB
NetWare	SPX, IPX, SAP, RIP	Q-Server over IPX Q-Server over IP R-Printer N-Printer
Ether Talk	ELAP, AARP, DDP, AEP, ZIP, RTMP, ATP, NBP	PAP

1.5.3.2 Network interface connectors and cables

(1) Connectors

100 BASE-TX / 10 BASE-T (Automatically switched, not usable simultaneously)

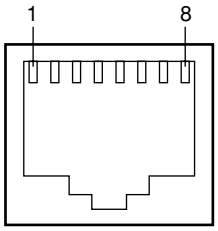

Connector pin assignment

2) Cables

RJ-45 connectorized non-shielded twisted-pair cable (Category 5 recommended)

1.5.3.3 Network interface signals

Pin No.	Signal name	Direction	Function
1	TXD+	FROM PRINTER	Transmitting data +
2	TXD-	FROM PRINTER	Transmitting data -
3	RXD+	TO PRINTER	Receiving data +
4	-	-	Not in use
5	-	-	Not in use
6	RXD-	TO PRINTER	Receiving data -
7	-	-	Not in use
8	-	-	Not in use

2. EXPLANATION OF OPERATION

2.1 Electrophotographic processing mechanism

(1) Electrophotographic process
The electrophotographic process is explained briefly below:

1. Charging
A voltage is applied to the CH roller to electrically charge the surface of the OPC drum.

2. Exposure
The LED head radiates light onto the charged OPC drum in accordance with the image signal. The electric charge of the radiated part of the OPC drum surface attenuates depending on the intensity of the light, thus forming an electrostatic latent image on the OPC drum surface.

3. Development
Charged toner adheres to the electrostatic latent image of the OPC drum by electrostatic power, and forms a visible image on the OPC drum surface.

4. Transfer
Paper is placed over the OPC drum surface and an electric charge is applied to it from the back side by the transfer roller, so that the toner image is transferred to the paper.

5. Drum cleaning
The drum cleaning blade removes toner remaining on the OPC drum after the transfer.

6. Removal of Electricity

7. Belt cleaning
The belt cleaning blade removes toner remaining on the belt.

8. Fuser
Heat and pressure are applied to the toner image on the paper to promote its fusion.

1. Charging
A voltage is applied to the charging roller, which is placed in contact with the OPC drum surface, to charge the OPC drum surface.

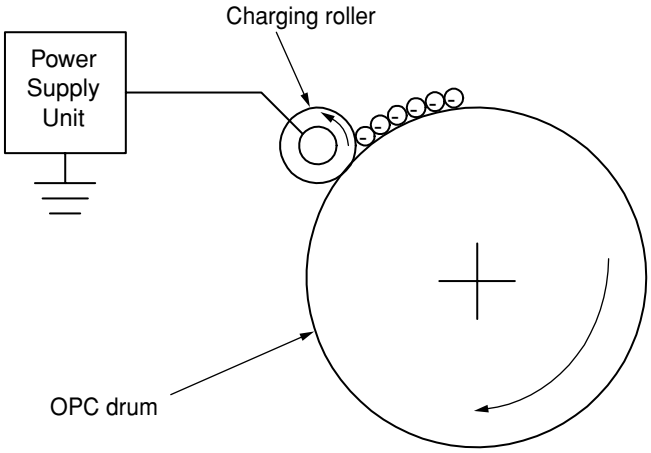

2. Exposure
The light emitted from the LED head is radiated onto the charged surface of the OPC drum. The charge of the radiated part of the OPC drum attenuates according to the intensity of the light, forming an electrostatic latent image on the OPC drum surface.

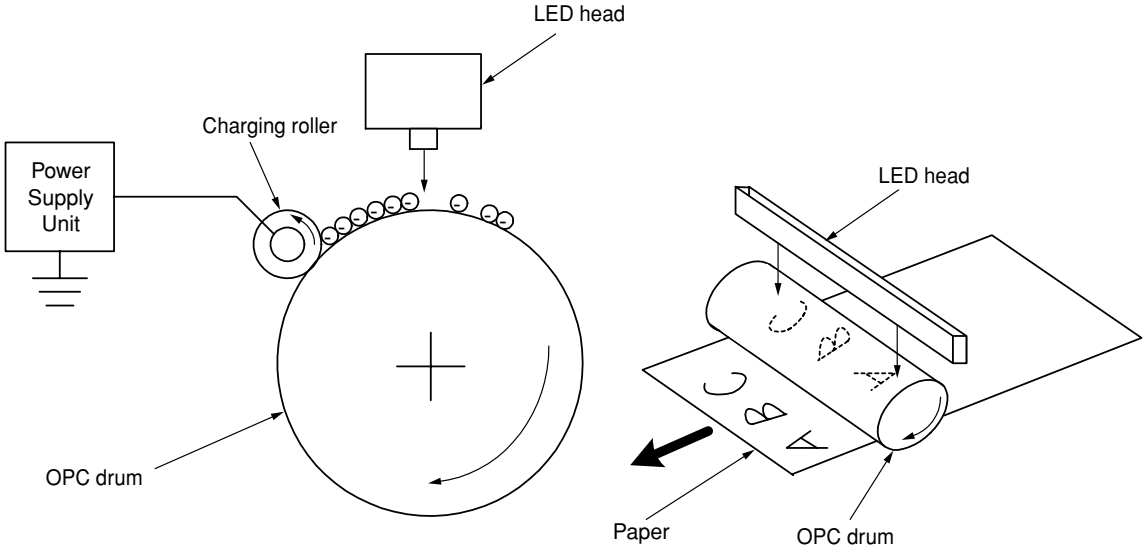

3. Development
Toner adheres to the electrostatic latent image on the drum surface, thereby turning the electrostatic latent image into a toner image.

1. The sponge roller allows the toner to stick to the development roller.

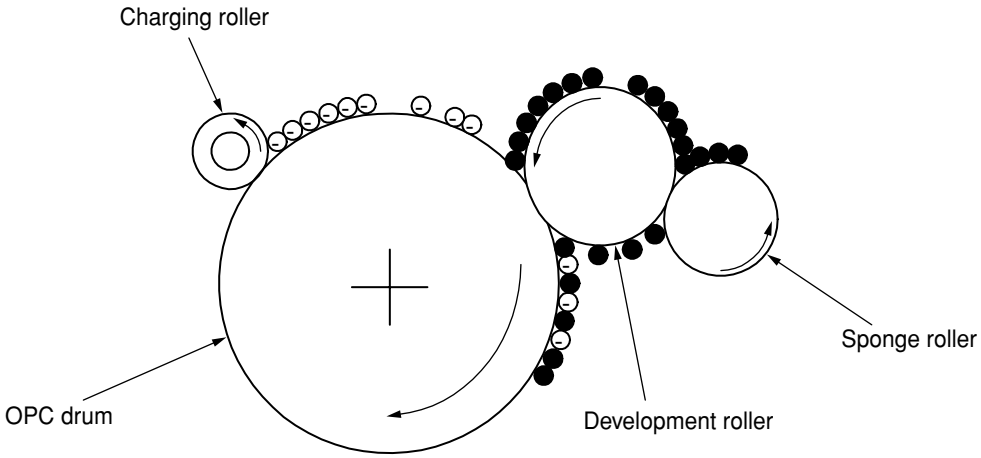

2. The electrostatic latent image on the OPC drum surface is turned into a visible image by the toner.

4. Transfer

A sheet of paper is placed over the OPC drum surface, and an electric charge is given to the paper from its back side by the transfer roller.

When a high voltage is applied to the transfer roller from the power source, the charge induced on the transfer roller moves on to the surface of the paper through the contact part between the transfer roller and the paper, the toner being attracted to the paper surface from the OPC drum surface.

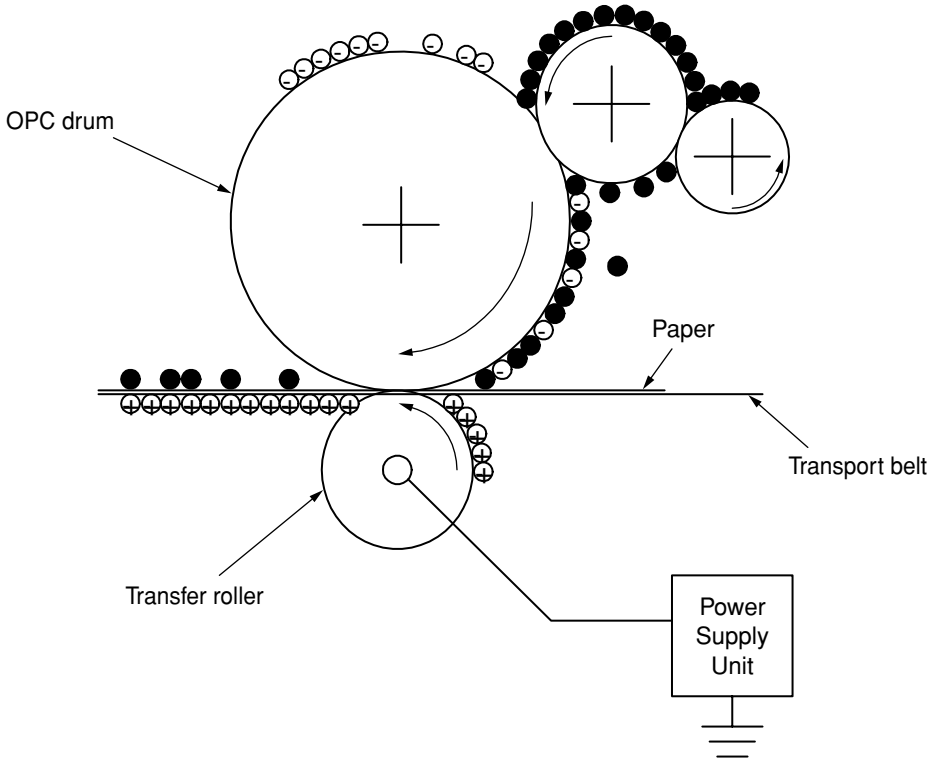

5. Drum cleaning

Unfixed toner remaining on the OPC drum is removed by the drum cleaning blade and collected into the waste toner area of the toner cartridge.

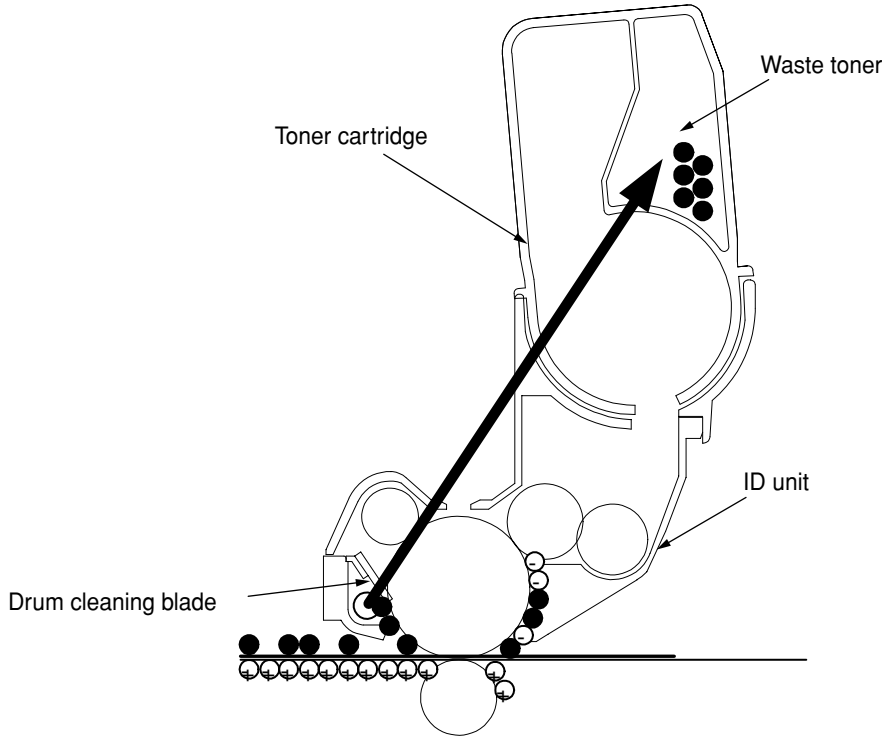

6. Removal of Electricity
Electrically charge on the OPC drum surface decveases by exppsing the OPC drum surface after transfer to the light.

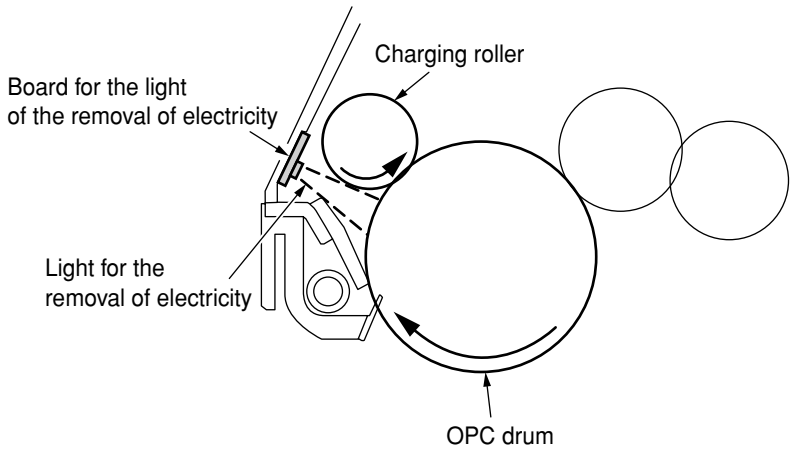

7. Belt Cleaning
Toner remaining on the transfer belt is scraped off by the belt cleaning blade and collected into the waste toner box of the transfer belt unit.

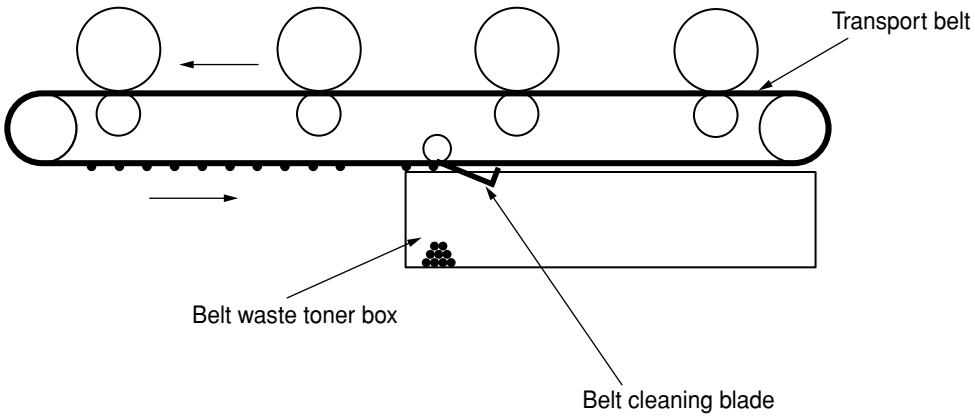

8. Fuser

The toner image which was transferred to the paper is applied heat and pressure as it passes between the heat roller and the backup roller, and it is therefore fused onto the paper.
For the sake of safety, a thermostat is provided; it comes on to cut off the voltage supplied to the heater if the heat roller temperature rises above a certain preset temperature.

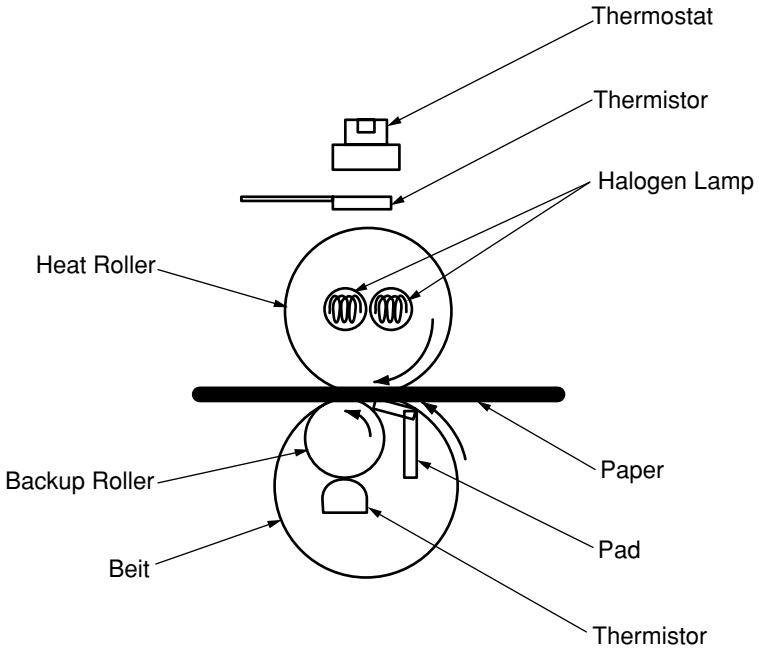

Fusing Temperature Settings

Paper thickness	Paper Type Settings	Temperature Settings
Thin	Light	Medium temp
↓	Medium	High temp
	Heavy	Medium temp
	U.Heavy	Low temp
Thick	OHP	Low temp

2.2 Printing process

The paper fed from Tray 1 or Tray 2 is carried by the paper feed roller, register roller L and transport roller. When the paper is fed from the MPT, it is carried by the MPT paper feed roller and register roller U. Then, an unfixed toner image is created on the paper transported onto the belt sequentially through the electrophotographic process of KYMC. Thereafter, the image is fixed under heat and pressure as the paper goes through the fuser unit. After the image has been fixed, the paper is unloaded to the stacker either face-up or face-down stacker, according to the outputting method selected by opening or closing the face-up stacker.
While the above refers to the one-sided print operation of the printer, its operation in two-sided print will be explained below.
When two-sided print is conducted, the paper that has passed through the fuser unit following first one-sided print is sucked into the Duplex unit by the separator DUP. After entering the paper reversal transport path, the paper is carried from there to the inside of the Duplex unit by the inverting operation of the reversal roller. Then, after passed through the Duplex unit by the transport roller that is located on the transport path inside the Duplex unit, the paper is fed along the paper feed route of the Duplex unit to eventually merge the same route that comes from the tray. From here on, the same operation as that of one-sided print of paper fed from the tray takes place.

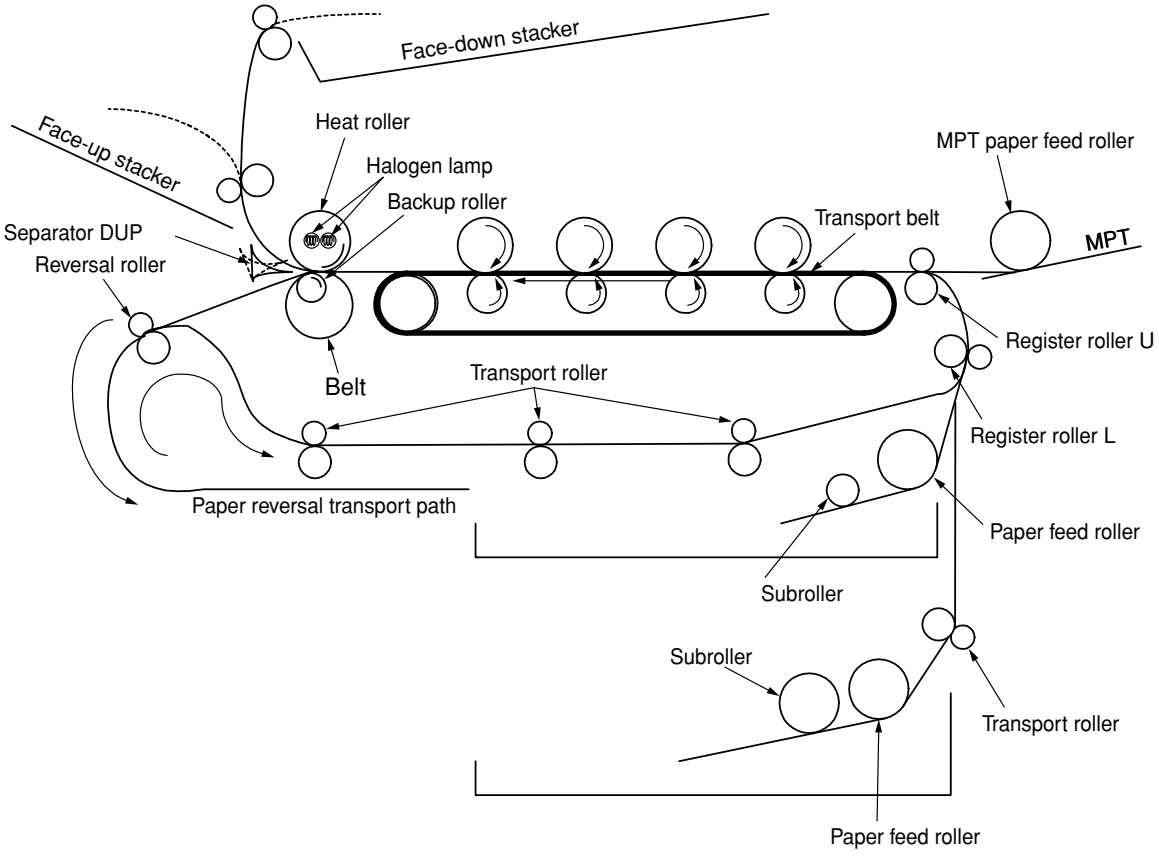

(1) Paper fed from 1st Tray

1. As illustrated in Figure 2-1, when the solenoid is ON, the register motor rotates (Counterclockwise turn), transporting the paper until the IN1 sensor comes ON. (When the solenoid is ON, the paper feed roller is driven.)

2. After causing the IN1 sensor to come ON, the paper is further carried over a certain distance to finally hit register roller L. (This corrects skew of the paper.)

3. As shown in Figure 2-2, the solenoid is turned OFF and the paper is transported by register roller L. (When the solenoid is OFF, register roller L is driven.)

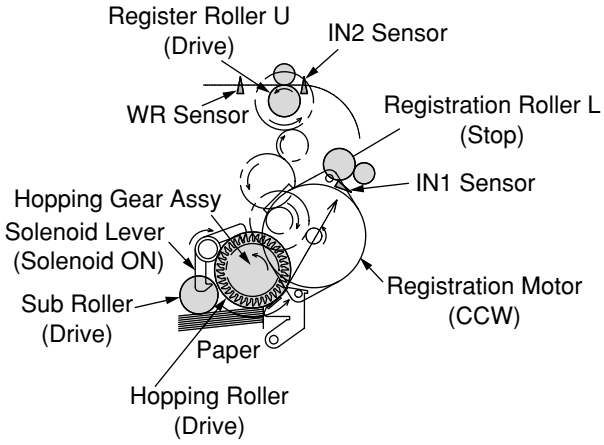

Figure 2-1

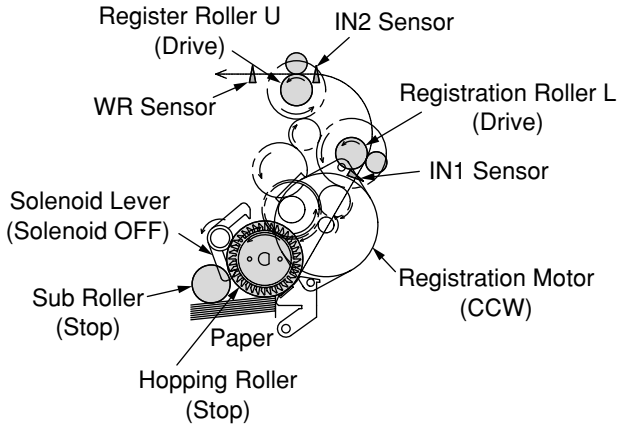

Figure 2-2

(2) Paper fed from MPT

1. As illustrated in Figure 2-3, when the solenoid is OFF, the register motor rotates (Clockwise turn), transporting the paper until the IN2 sensor comes ON. (As the register motor rotates clockwise, the MPT paper feed roller is driven.)

2. After causing the IN2 sensor to come ON, the paper is further carried over a certain distance to finally hit register roller U. (This corrects skew of the paper.)

3. As shown in Figure 2-4, the register motor rotates (Counterclockwise turn) to let register roller U transport the paper. (As the register motor rotates counterclockwise, register roller U is driven.)

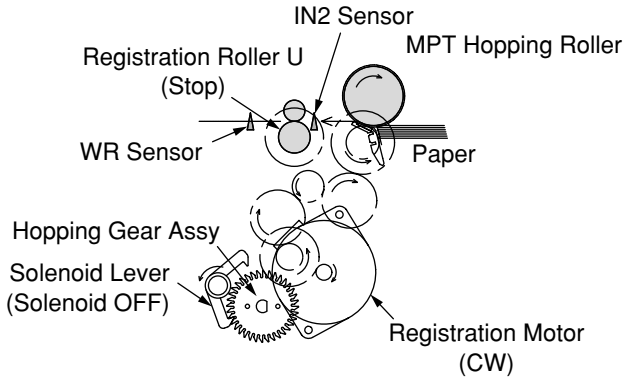

Figure 2-3

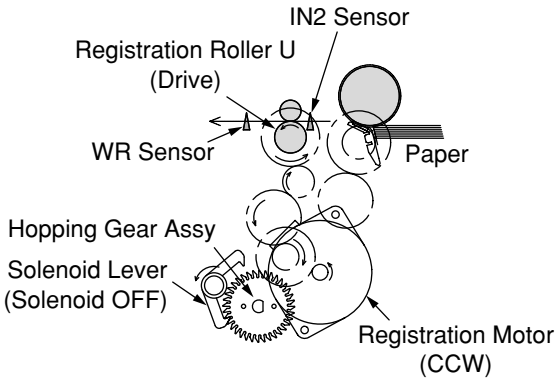

Figure 2-4

(3) Transport belt

1. As the transport belt motor rotates in the direction of the arrow, the transport belt is driven. The belt unit consists of one transport roller placed immediately underneath each color drum, with a transport belt inserted in between them.
   As the specified voltage is applied, the transport belt and the transport rollers send the paper located on the transport belt to the fuser unit while transferring to it the toner image present on each color drum.

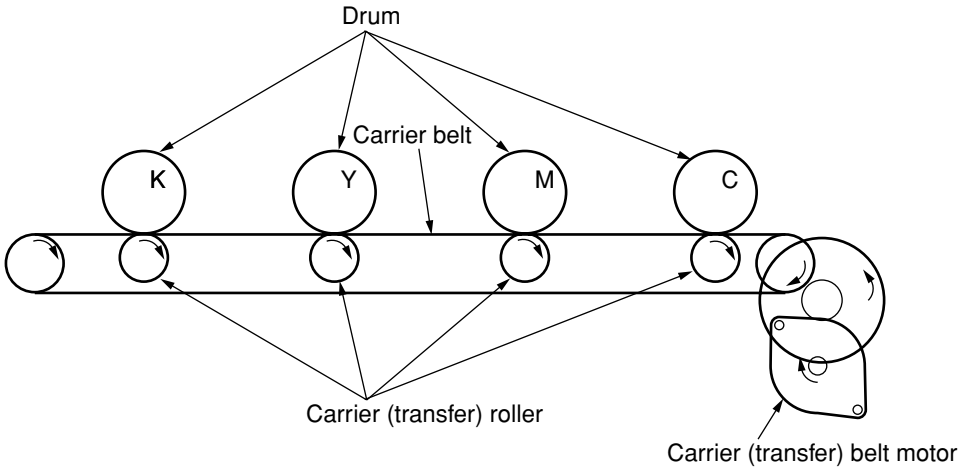

Figure 2-5

(4) Up/down-motions of ID units

1. The up/down-motions of the ID units take place driven by the lift-up motor.

2. Figure 2-6 shows the motions of the different ID units when the printer is operated for color print. As the lift-up motor rotates (Clockwise turn), the lift-up link slides to the left, causing the ID units to come down, as can be seen in Figure 2-6. Namely, the printer is readied for color print.

3. Figure 2-7 shows the motions of the different ID units when the printer is operated for monochrome print. As the lift-up motor rotates (Counterclockwise turn), the lift-up link slides to the right, causing the ID units to go up, except for the K-ID unit, as can be seen in Figure 2-7. Namely, the printer is readied for monochrome print.

ID Unit Operations During Color Printing

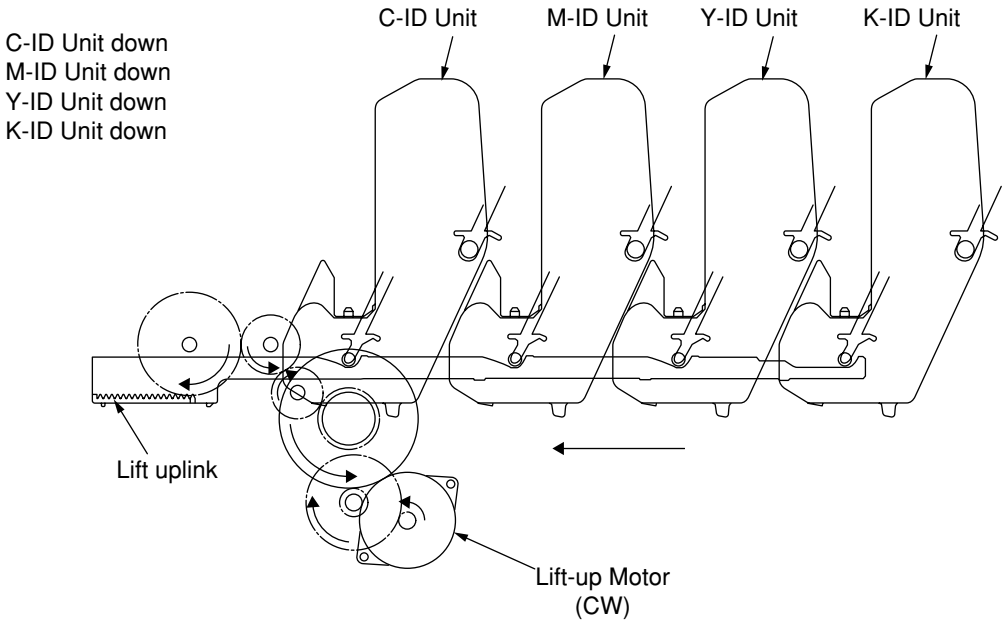

Figure 2-6

ID Unit Operations During Monochrome Printing

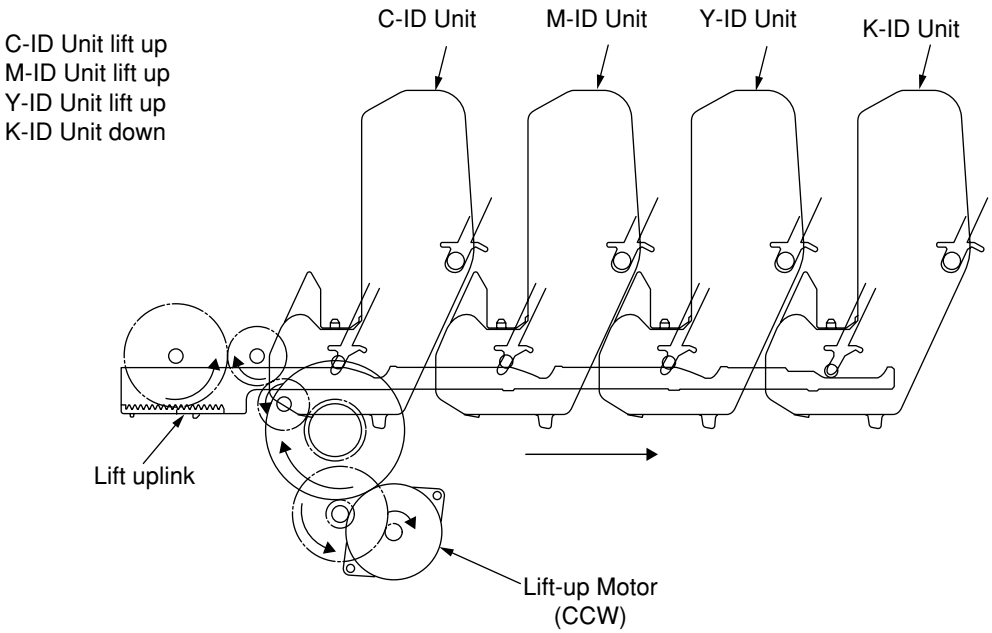

Figure 2-7

(5) Fuser unit and paper output

1. As illustrated in Figure 2-8, the fuser unit and delivery roller are driven by the DC motor. As the fuser motor rotates (Counterclockwise turn), the heat roller is turned. This roller fixes a toner image by heat and pressure.

2. At the same time, the delivery roller rotates to output the paper.

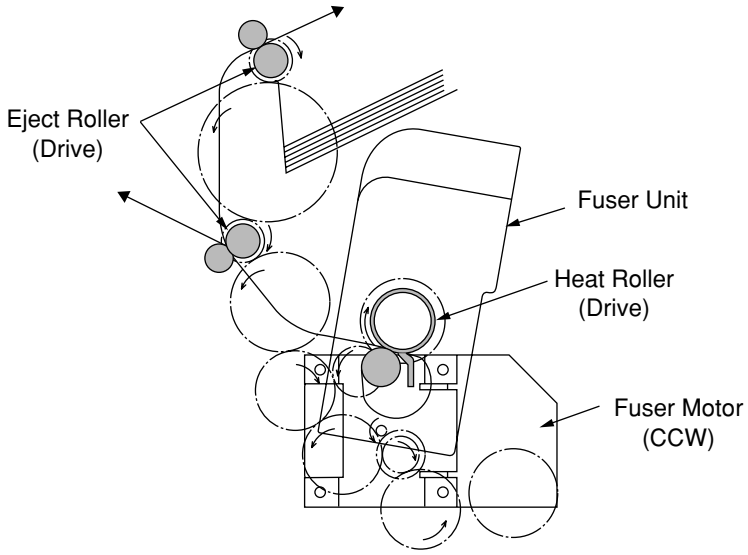

Figure 2-8

(6) Cover-opening motion of color drift sensor and density sensor

1. As illustrated in Figure 2-9, when the fuser motor rotates (Clockwise turn), the cover-opening gear rotates, causing the color drift sensor and density sensor cover to open.

2. As the fuser motor rotates in reverse (Counterclockwise turn), the engagement of the cover-opening gear is freed, and the color drift sensor and density sensor cover now closes.

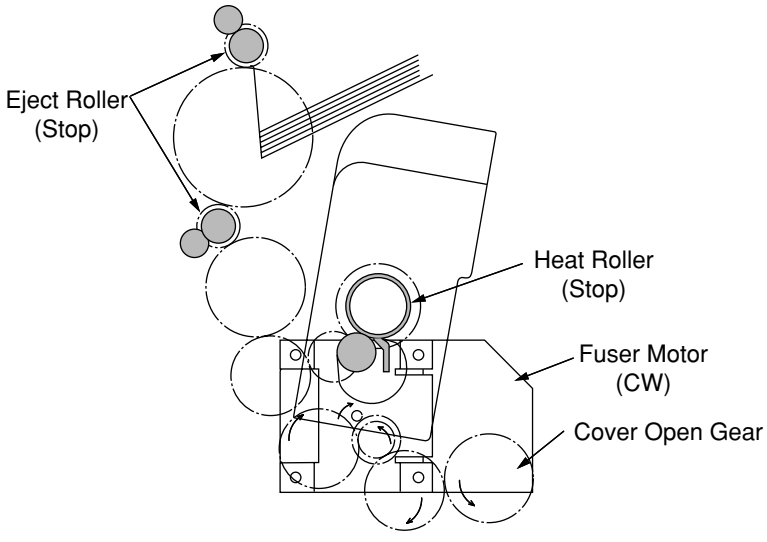

Figure 2-9

Outline of color drift correction

The color drift correction is implemented reading the correction pattern that is printed on the belt with the sensor located inside the sensor shutter under the belt unit. This sensor is used to detect and correct the pattern.

Automatic start timing of color drift correction:

- At power-on
- When the cover is closed after it is opened briefly
- When 400 pages or more have been printed since previous execution

  A correction error may be issued due to an inadequate toner amount of the pattern generated, a sensor stained with toner, deficient opening/closing of the shutter, or for other reasons. However, even if an error is issued, it is not indicated on the operator panel. Therefore, forcible color drift correction will have to be performed in the self-diagnostic mode (Subsection 5.3.2.6) to check the error indication.

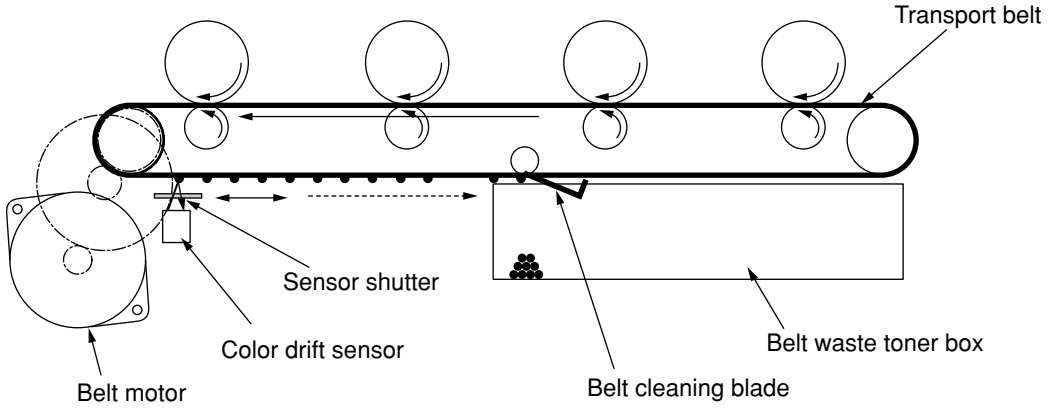

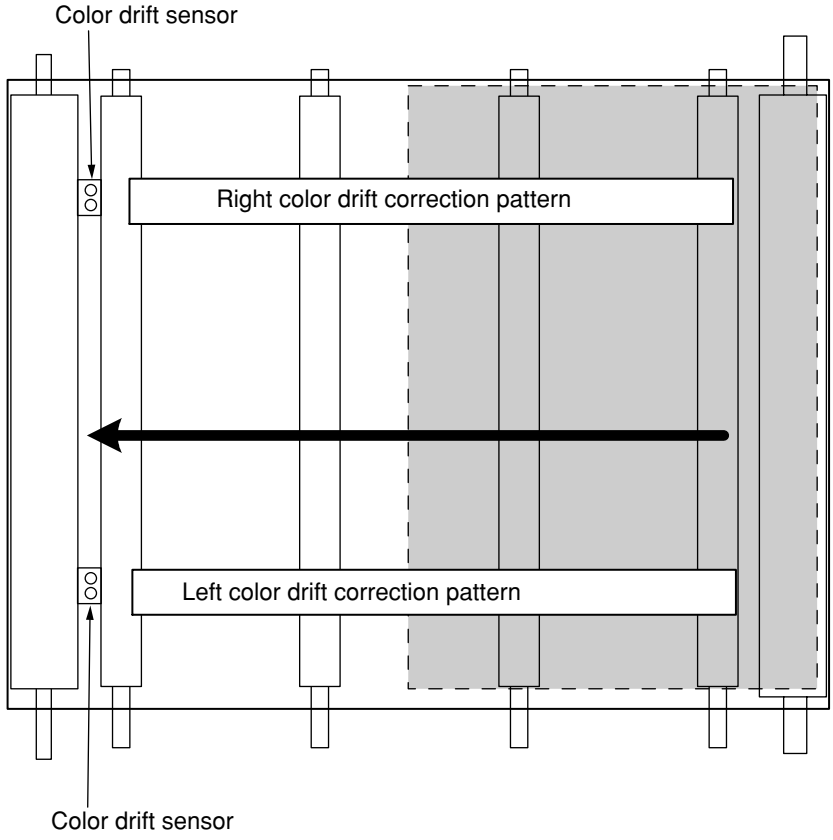

Error checking methods and remedial methods

The color drift correction test function among the other self-diagnostic functions is employed to check errors. (Subsection 5.3.2.6)

Remedial methods against different errors

- CALIBRATION (L or R), DYNAMICRANGE (L or R)

  Check 1: If the above indication appears, check the connected state of the sensor cable (FFC).
  If the connected state is found abnormal, restore it to the normal state.

  Check 2: Check to see whether the sensor surface is stained with toner, paper dust or any other foreign matter.
  If it is found stained, wipe it clean.

  Check 3: Check to see whether the sensor shutter opens and closes normally, by the MOTOR & CLUTCH TEST of the self-diagnostic function. If the shutter operates imperfectly, replace the shutter unit.

- BELT REFLX ERR

  Check 4: If this indication appears, check the cleaned state of the toner remaining on the belt surface, in addition to making the above checks 1, 2 and 3. Take out the belt unit, turn the drive gear located on the left rear side, and ensure that the belt surface has been cleaned thoroughly.
  If cleaning is not achieved perfectly and there still remains toner on the belt surface after the drive gear has been turned, replace the belt unit.

- (Y or M or C) LEFT, (Y or M or C) RIGHT, (Y or M or C) HORIZONTAL

  Check 5: If the above indication appears, check to see whether the toner is running short, based on an NG-issuing color.
  Replace the toner cartridge, as needed.

Outline of density correction method

The density correction is implemented reading the correction pattern that is printed on the belt with the sensor located inside the sensor shutter under the belt unit.
Automatic start timing of density correction:

- If the environment at power-on is greatly different from the one in which previous print was executed.
- If at least one or more of the four ID count values are close to those of a new product at power-on.
- When the ID count value exceeds 500 counts since previous execution.

A correction error may be issued due to an inadequate toner amount of the pattern generated, a sensor stained with toner, deficient opening/closing of the shutter, or for other reasons. However, even if an error is issued, it is not indicated on the operator panel. Therefore, forcible density correction will have to be performed in the self-diagnostic mode (Subsection 5.3.2.7) to check the error indication.

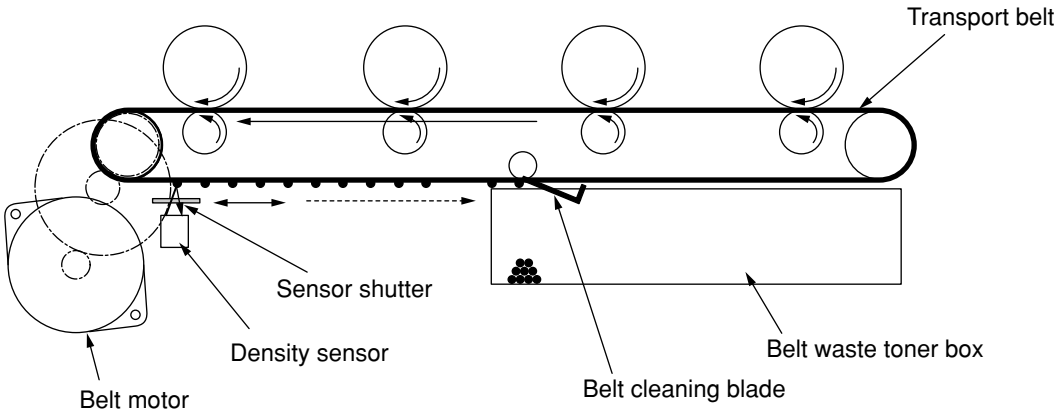

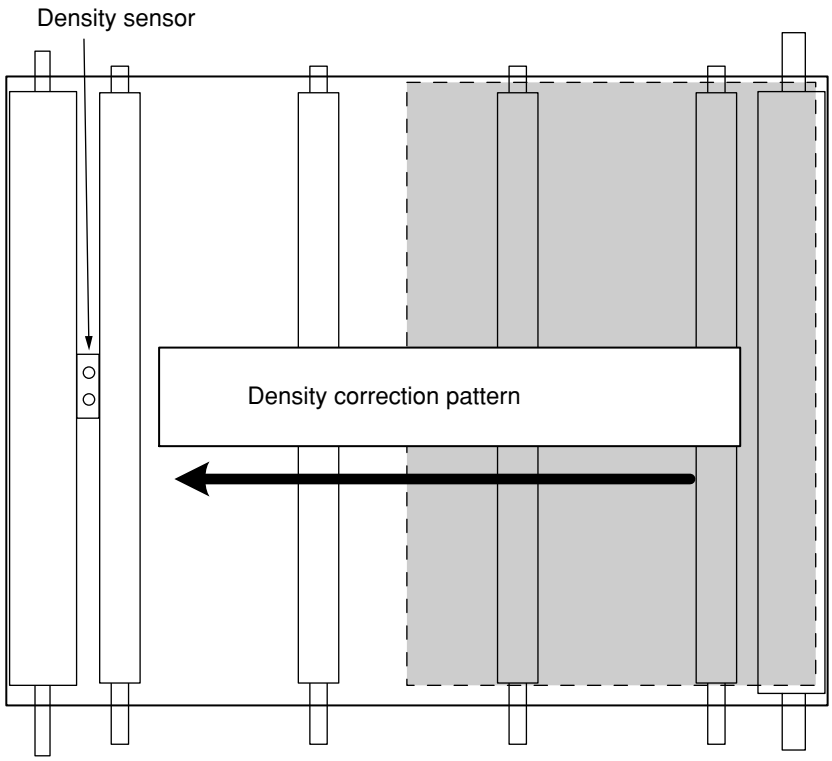

Error checking methods and remedial methods

The density correction test function among the other self-diagnostic functions is employed to check errors. (Subsection 5.3.2.7)
Remedial methods against different errors

- CALIBRATION ERR, DENS SENSOR ERR

  Check 1: If the above indication appears, check the connected state of the sensor cable. If the connected state is found abnormal, restore it to the normal state.

  Check 2: Check to see whether the sensor surface is stained with toner, paper dust or any other foreign matter. If it is found stained, wipe it clean.

- DENS SHUTTER ERR

  Check 3: Check to see whether the sensor shutter opens and closes normally, by the MOTOR & CLUTCH TEST of the self-diagnostic function. If the shutter operates imperfectly, replace the shutter unit.

- DENS ID ERR

  Check 4: Take out the ID unit and examine it to see if the drum surface has any abnormal toner smudge. Replace the LED head (Blurred focus), or replace the ID unit. To test-operate a new ID unit, use the Fuse Keep Mode of the maintenance menu.

Principle of toner sensor detection

Toner LOW is detected by the toner sensor (Reflection sensor) installed inside the printer. The shielding plate is mounted inside the ID and rotates in synchronization with toner agitation. Moreover, the ID has a shutter fitted. The shutter is synchronized with the operation lever of the toner cartridge, and the toner sensor can detect that the toner cartridge has been loaded properly. Detection may not take place normally, and a toner sensor error may be issued, if the shield plate or toner sensor is stained with toner, or if the ID unit and toner sensor do not remain exactly opposite to each other in their positions.

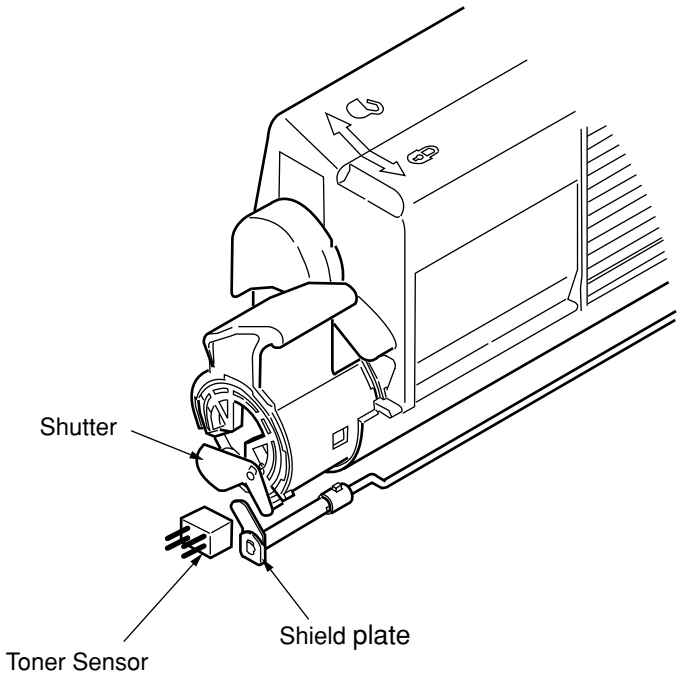

Principle of toner counter

After image data is developed to binary data which the printer can print, it is counted by an LSI as a number of print dots. The amount of toner consumed is calculated from that count value, and the remaining amount of toner is thus indicated. As opposed to this, the toner LOW detection by the toner sensor is implemented when the toner amount remaining inside the ID unit physically decreases to below a certain level.

Principles of ID, belt and Fuser counters

ID counter:	One count represents the value that results from dividing the amount of rotation of the drum by three when three A4-size sheets are printed continuously.
Belt counter:	One count represents the value that results from dividing the amount of rotation of the belt by three when three A4-size sheets are printed continuously.
Fuser counter:	One count is registered when paper is shorter than the length of Legal 13-inch paper. When paper is longer than that, the count number is determined by the number of times the Legal 13-inch paper length is exceeded. (Decimal fractions rounded up)

3. INSTALLATION

3.1 Cautions, and do's and don'ts

⚠Warning

- Do not install the printer at high temperature or near fire.
- Do not install the printer in a location where chemical reaction can take place (laboratory, etc.).
- Do not install the printer in the proximities of inflammable solvents, such as alcohol, paint thinner, etc.
- Do not install the printer within reach of small children.
- Do not install the printer in an unstable location (e.g., on a rickety bench or grade).
- Do not install the printer in a location laden with moisture or heavy dust, or in direct sun.
- Do not install the printer in an environment with sea wind or corrosive gas.
- Do not install the printer in a location with heavy vibration.
- In the event that the printer is inadvertently dropped or its cover is damaged, remove the power plug from the power outlet and contact Customer Center.
  Such mishap could lead to an electric shock, fire or injury.
- Do not connect the power cord, printer cable or grounding wire in any other manner than the way specified in the manual. Failure to observe the above could result in fire.
- Do not stick in an object into the vent hole.
  Such action could lead to an electric shock, fire or injury.
- Do not place a glass filled with water or the like on the printer.
  Such action could lead to an electric shock or fire.
- When the printer cover has been opened, do not touch the fuser unit.
  Burns could be suffered.
- Do not throw the toner cartridge or the image drum cartridge into fire.
  Dust explosion could cause burns.
- Do not use a highly combustible spray near the printer.
  Fire could be caused, since the printer contains a part that gets extremely hot inside.
- In the event that the cover becomes unusually hot, emits smoke, ill odor, or abnormal noise, remove the power plug from the power outlet and contact Customer Center.
  Fire could break out.
- If water or any other liquid enters the inside of the printer, remove the power plug from the power outlet and contact Customer Center.
  Fire could break out.
- If a pao not operate or disassemble the printer in any other manner than the way specified in the manual.
  Failure to observe this warning could result in an electric shock, fire or injury.

⚠Caution

- Do not install the printer in a location where its vent hole is blocked.
- Do not install the printer directly on a shaggy carpet or rug.
- Do not install the printer in a sealed room or other location with poor ventilation or permeability.
- Install the printer away from a heavy magnetic field or noise source.
- Install the printer away from a video monitor or TV.
- To move the printer, hold it by both sides of it.
- This printer, which weighs Approx. 29kg (with Duplex)/Approx. 26kg (w/o Duplex), should be lifted up by two or more persons.
- When the printer has the power switched on or is printing, do not come close to the paper delivery section.Such action could lead to injury.

When the precautionary notes concerning the installation and operation are explained, the user should be referred to the precautionary notes given in the User's Manual. Especially, give thorough explanation on the power cord and grounding wire.

3.2 Unpacking method

⚠Warning	Personal injuries may occur.	⚠

Make sure to lift up this printer by two or more persons, since it weighs Approx. 29kg (with Duplex)/ Approx. 26kg (w/o Duplex)

- Remove the four handles from the sides of the box, as illustrated below, and lift up the corrugated fiberboard box.

3.3 Printer Installation Instructions

- Install the printer in a location where the following temperature and humidity are met:
  Ambient temperature: 10 - 32˚C
  Ambient humidity: 20 - 80 %RH(Relative humidity)
  Max. wet-bulb temperature: 25˚C
- Use caution to avoid dew condensation.
- If the printer is installed in a location with ambient relative humidity below 30%, use a humidifier or antistatic mat.

Installation space

- Place the printer on a flat desk large enough to accommodate its footings.
- Provide ample spaces around the printer.

Plan view

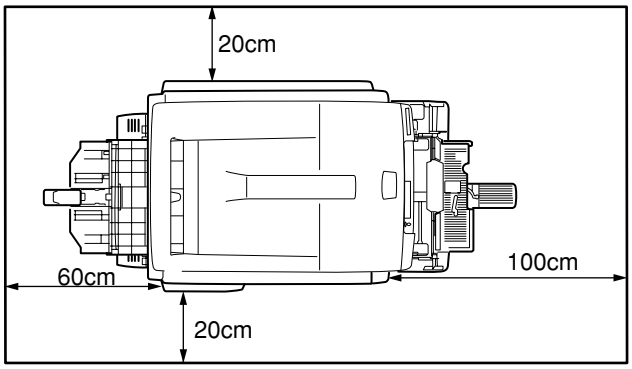

Side View

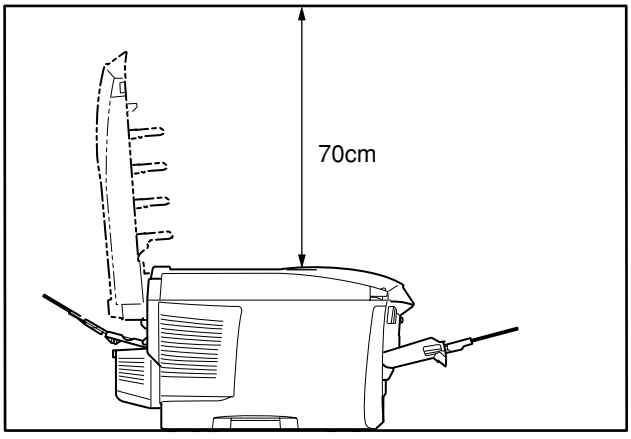

3.4 Listing of component units and accessories

- Check to make sure that the component units are free from damage, dirt or other zirregularities in the appearance.
- Ensure that none of the accessories to the units is missing and that they are free from breakage or other flaw.
- If any irregularity is discovered, contact User Management Section for instructions.

⚠Warning	Personal injuries may occur.	⚠

Make sure to lift up this printer by two or more persons, since it weighs Approx. 29kg (with Duplex)/Approx. 26kg (w/o Duplex)

Printer (Main body)

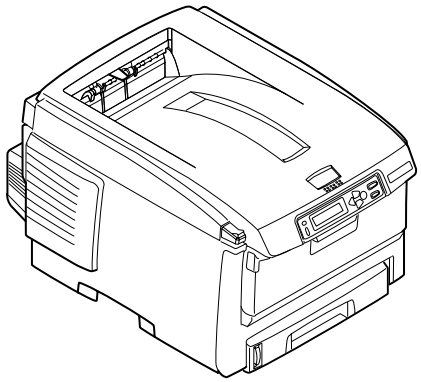

C6150/C6050/C5950/C5850/C5750/C5650

Image drum cartridges (4 sets) fitted with starter toner cartridges (Installed in the printer)

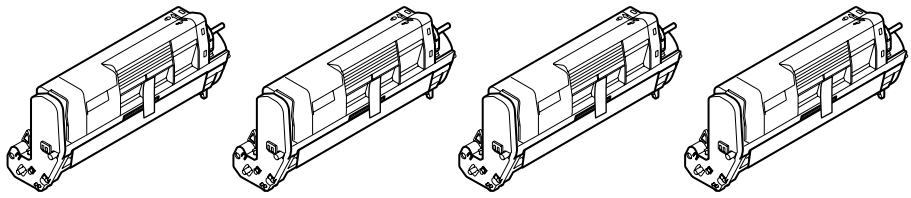

Inform the user that the toner cartridges and image drum cartridges can be separated one from the other.

Printer software CD-ROM
LED lens cleaner
Power cord
Warranty Card and User Registration Card
User's Manual (Setup)
User's Manual (CD-ROM)
Quick Guide
Dedicated bag for Quick Guide

Note! No printer cable is supplied with the printer.

3.5 Assembling method

3.5.1 Assembly of printer main body

Removing the protective materials

1) Peel off the protective tapes (5) and the slip of paper from the front part of the printer, and also peel off the protective tapes (2) from the back of the printer.

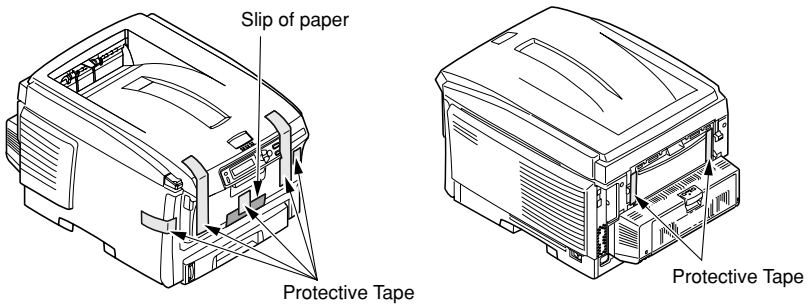

2) Draw out the paper cassette.
3) Pull out the retainer forward.
4) Open the top cover by pressing the OPEN button.

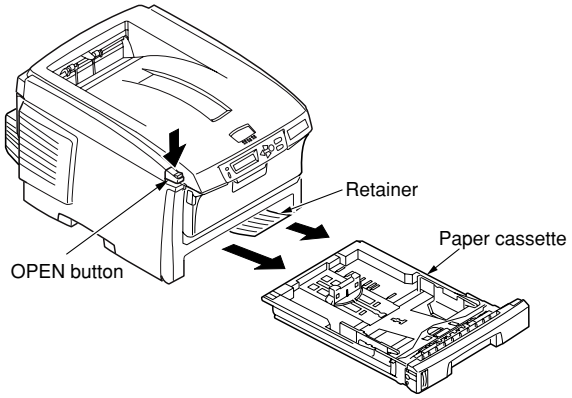

5) Detach the stopper release (Orange) while pressing down the lever (Blue) of the fuser unit in the direction of arrow ①.

Note! Instruct the user of the printer to be sure to keep the stopper release, which is used for transporting the printer, at hand.

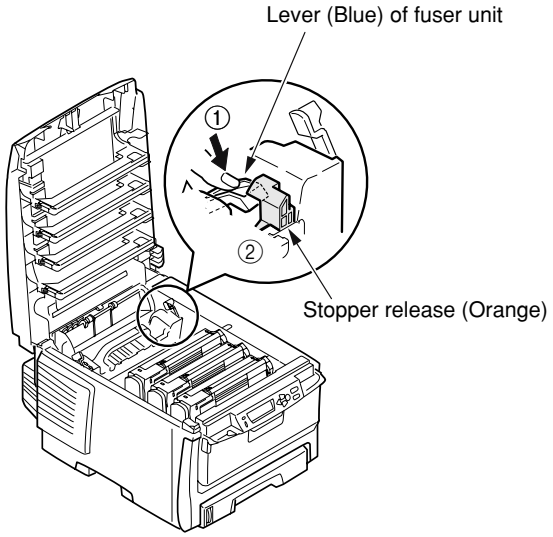

Installing the image drum cartridges

1) Take out the image drum cartridges (4) gently along with the toner cartridges attached.

Note! • The image drum (Green tubular section) is extremely vulnerable. Exert good caution in handling it.
• Do not expose the image drum cartridges to direct sun or intense light (1500 lux or more). Do not expose them to the room lighting for over five minutes.
• In the above operation, be careful not to actuate the blue lever of the toner cartridge.

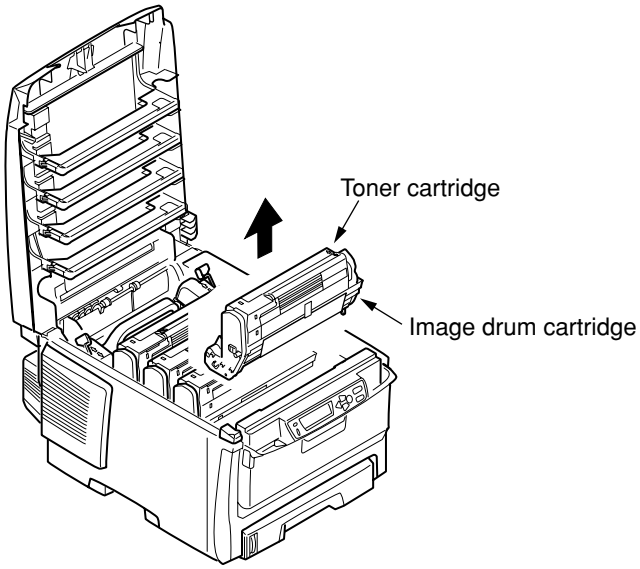

2) Place the image drum cartridge on a flat-top desk or the like, peel off the tape fastening protective sheet 1, and pull out the sheet in the direction of the arrow.

Note! Do not work with the image drum floating in the air.

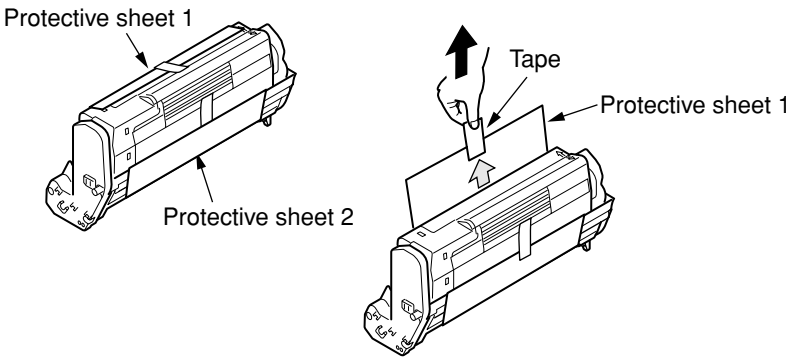

3) Pull out protective sheet 2 from the image drum cartridge in the direction of the arrow.
3/ Protective sheet

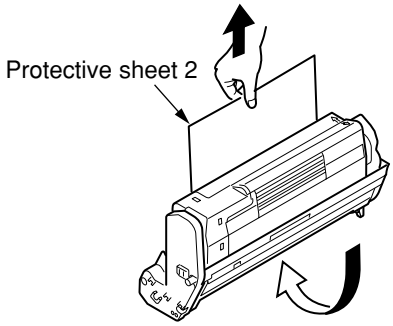

4) Match the label colors of the image drum cartridges to those on the printer.
5) Gently put the image drum cartridges (4) back in their respective positions.

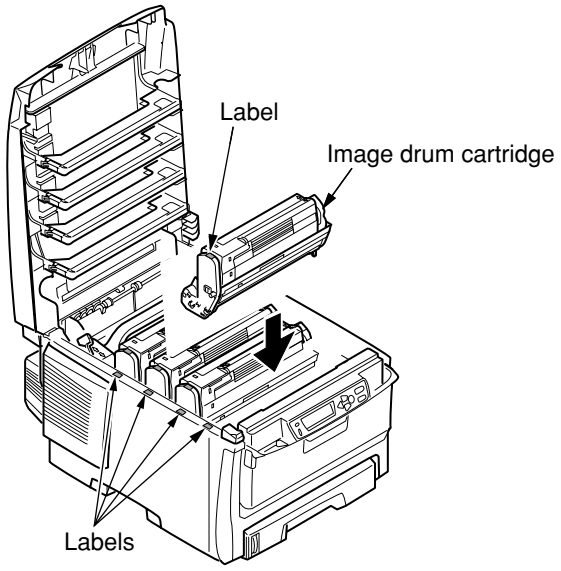

6) Turn the blue levers (4) of the toner cartridges fully into the direction of the arrow.

Note! • The starter toners (Toner cartridges supplied with the product) can print approximately 1500 A4-size sheets with 5% print density.
• If the error message [REPLACE TONER] stays permanently on the operator panel, check to make sure that the levers of the toner cartridges have fully been moved in the direction of the arrow.
• If normal starter toner cartridges have been used, the starter toners can no longer be used. First use the starter toners, and use normal toners after the starter toners are exhausted.

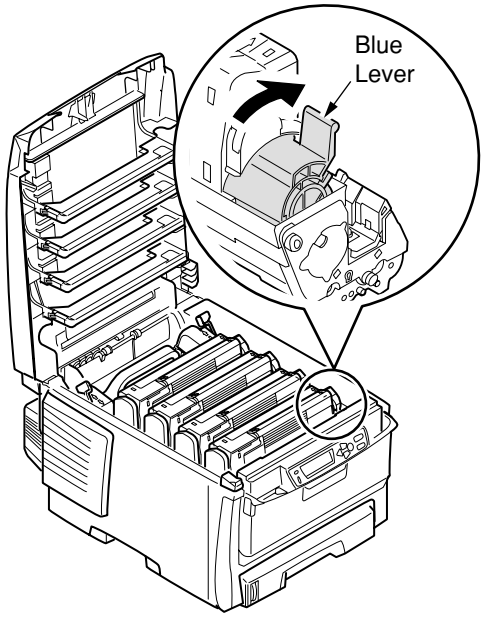

Loading paper in the paper cassette

1) Pull out the paper cassette.

Note! Do not peel off the rubber attached to the plate.

2) Set the paper stopper securely, according to the paper size.

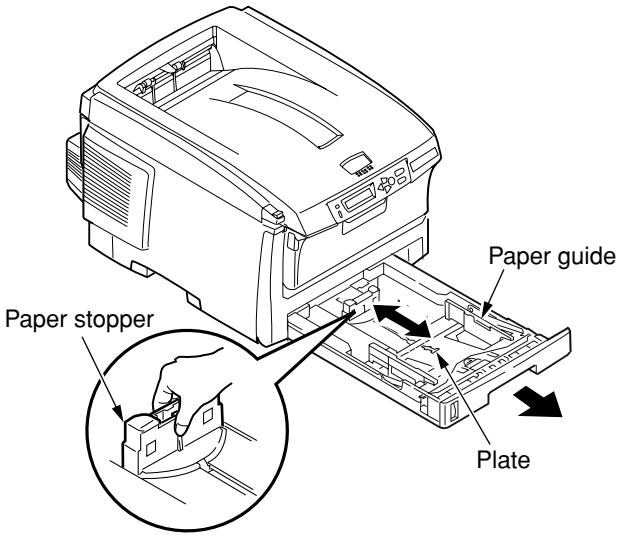

3) Loosen the paper well and line up its vertical and lateral edges.

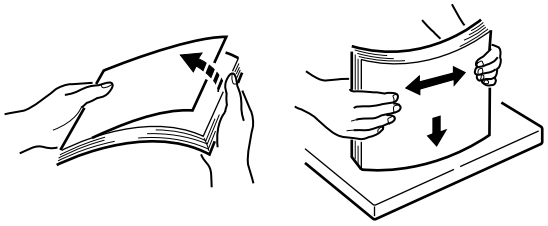

4) Load the paper with the print face down.

Note! • Place the paper aligned to the forward end of the paper cassette.
• Load the paper by avoiding to exceed the (▽) mark of the paper guide. (300 sheets of 70kg ream weight paper).

5) Fasten the paper with the paper guides.

6) Put the paper cassette back into the printer.

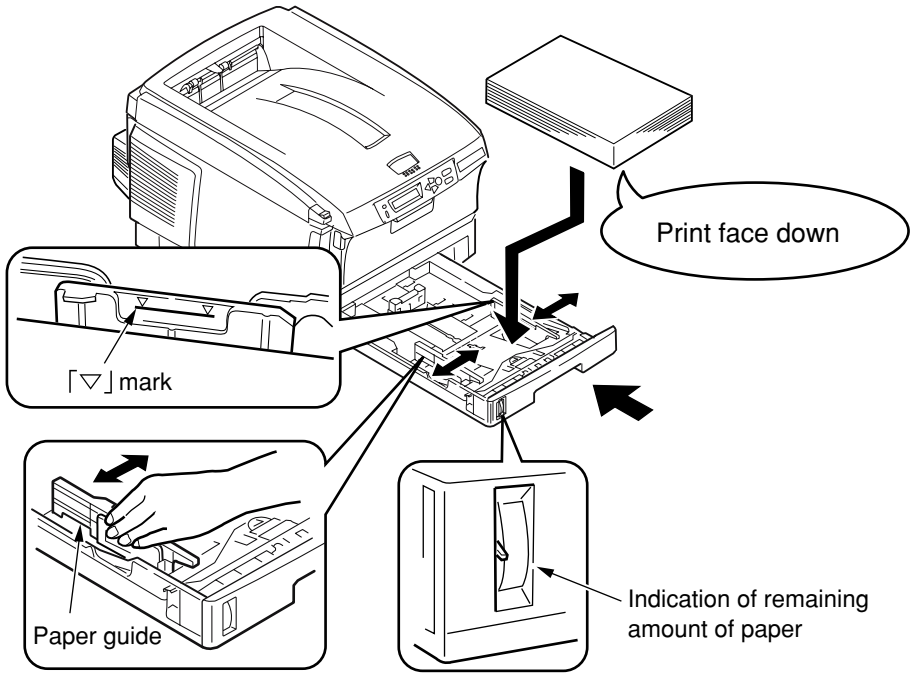

Loading paper in the multi-purpose tray

1) Open the multi-purpose tray and also the paper supporter.

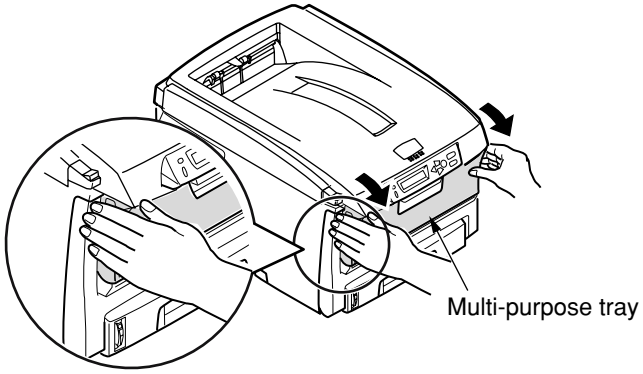

2) Set the manual feed guide to the paper size.
3) Line up the vertical and lateral edges of the paper.

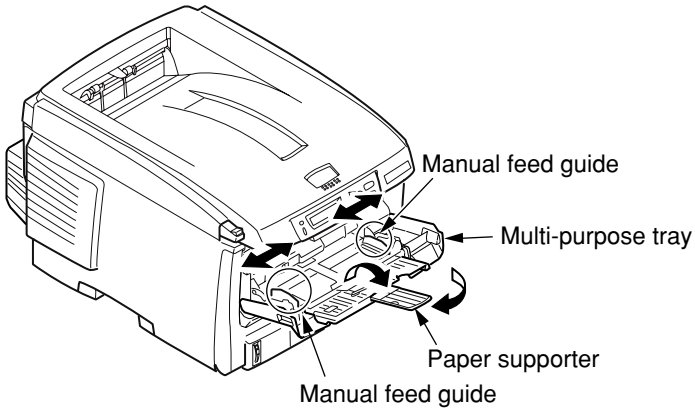

4) Insert the paper, print-face up, along the manual feed guide straight as far as it will go.

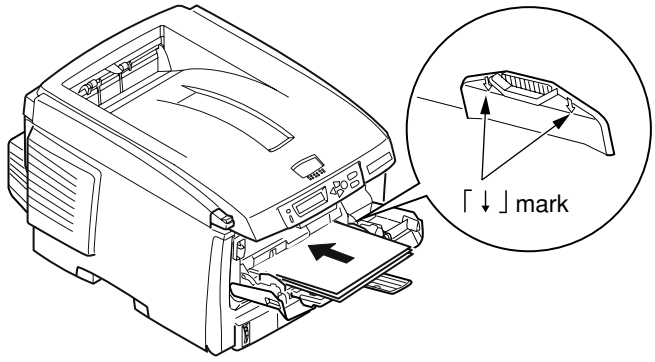

5) Press the set button.

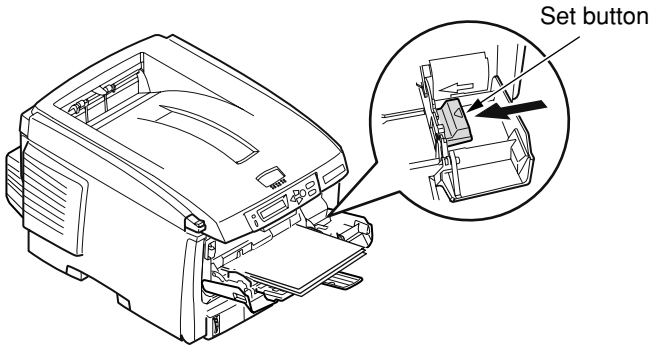

Storing the Quick Guide

Paste the dedicated Quick Guide bag to the printer, and put the Quick Guide in it.

Turning back the dedicated Quick Guide bag and peeling off the adhesive double coated tapes (2).

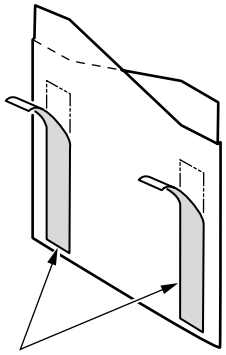

Adhesive double coated tapes

Pasting the dedicated bag to the printer.

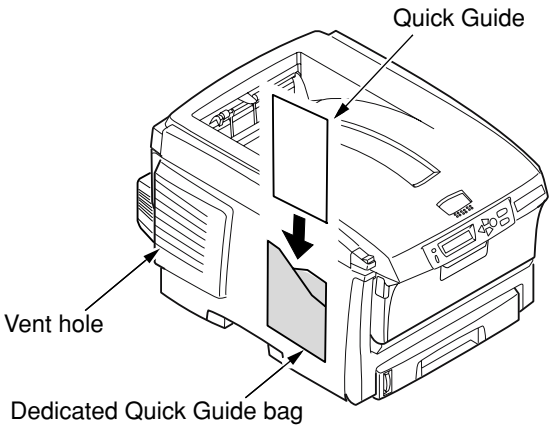

Note! When pasting the bag, avoid blocking the vent hole of the printer.

3.5.2 Connection of power cable

Power supply conditions

- Observe the following conditions:
  AC: 110~127V±10%/220~240V±10%
  Power frequency: 50Hz or 60Hz ± 2Hz Approx. 29kg (with Duplex)/Approx. 26kg (w/o Duplex)
- If the available power is unstable, use a voltage regulator or the like.
- The maximum power consumption of this printer is 1200W. Ensure that the power source offers an ample margin in the power capacity.

⚠**Warning**	It may expose you to electric shocks or cause a fire.	

- Always before connecting or disconnecting the power cord and grounding wire, first turn off the power switch.
- The grounding wire should be connected to a grounding terminal. Do Not in any event tie it to a water service piping, gas piping, ground of telephone lines, lightning arrester or the like.
- When plugging in or unplugging the power cord, be sure to hold the power plug.
- Insert the power plug securely into the power outlet as far as it will go.
- Do not insert or remove the power plug with a wet hand.
- Lay the power cord in a location where it is not likely stepped on, and avoid placing anything on the power cord.
- Do not bundle or tie the power cord.
- Do not use a damaged power cord.
- Avoid a starburst connection of cables.
- Do not connect the printer to the same power outlet shared by other electric appliances. Especially, if the printer is connected to the same power outlet in conjunction with an air-conditioner, copy machine or shredder, electric noise may cause false operation of the printer. If it is inevitable to connect them to the same power outlet, use a commercial noise filter or noise-cut transformer.
- Operate the printer with the supplied power cord only.
- Do not use an extension cord. If it is inevitable to use an extension cord, use one with rating of 15A or more.
- Use of an extension cord may hinder the printer from operating normally because of voltage drop.
- Do not turn off the power or pull out the power plug while the printer is printing.
- If the printer is going to be placed out of use for an extended period of time due to a long spell of holidays or a trip out of town, unplug the power cord.

About the connections of the power cord and grounding wire, the user should be given thorough explanation on the basis of the User's Manual.

Connecting the power cord

Note! Ensure that the power switch is in OFF (O).

1) Insert the power cord into the printer.
2) Connect the grounding wire to the ground terminal of the power outlet
3) Insert the power plug into the power outlet.

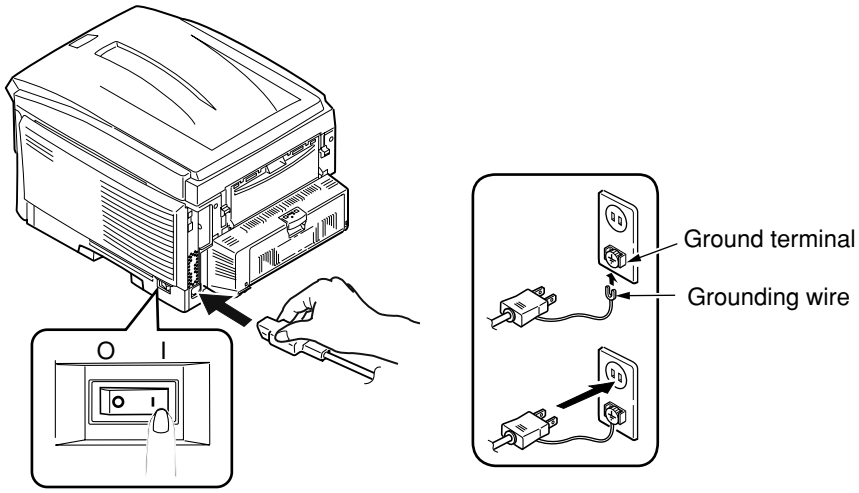

Pressing ON (|) of the power switch

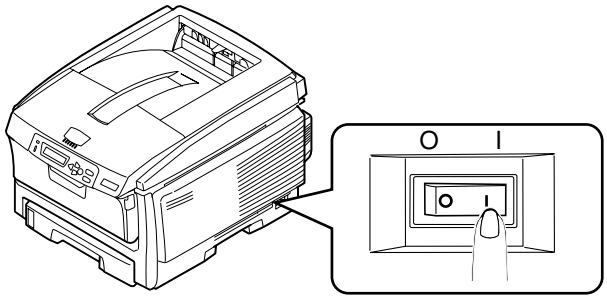

The following indication will be produced on the operator panel, and [Online] will appear when the printer has started up completely.

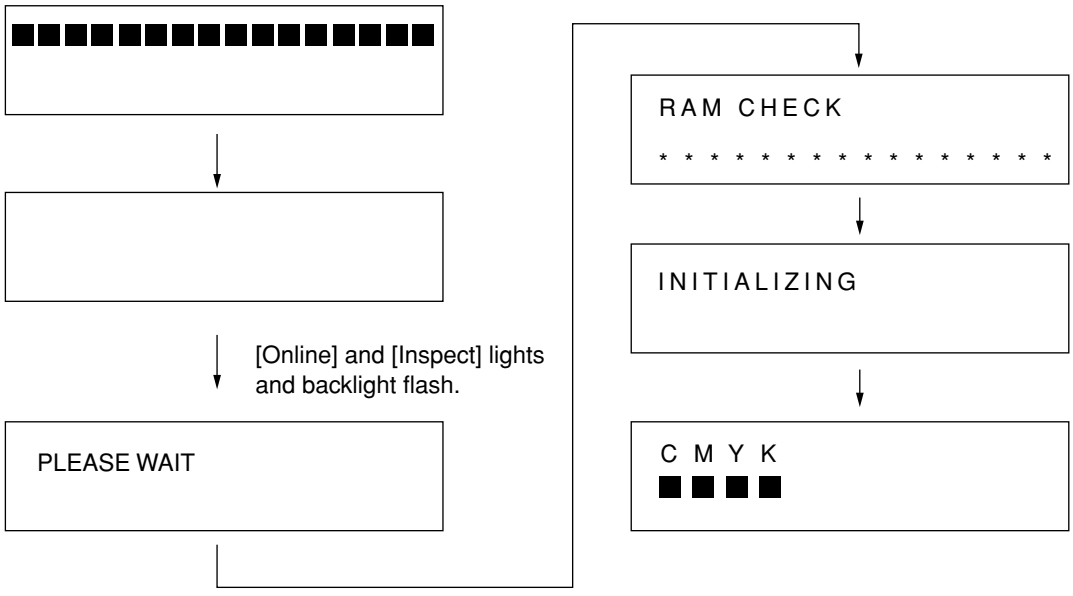

Turning off the power

On the C6150/C6050/C5950/C5750 which is not equipped with the built-in type hard disk (optional) or the C5850/C5650, the power can be turned off as is.

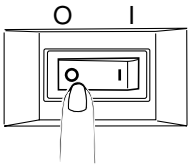

Note! Do not turn off the power while the printer is printing.

On the C6150/C6050/C5950/C5750 equipped with the built-in type hard disk (optional), do not outright turn off the power, but follow the procedure described below.

Note! • Abrupt disconnection of the power could damage the built-in hard type disk, disabling it.
• [SHUTDOWN MENU] is displayed only when the printer is equipped with the optional built-in type hard disk.

(1) Press the "Back" switch for four seconds or longer to cause [SHUTTING DOWN] to appear.

(2) Press the "Set" switch.
[SHUTDWN] is displayed, and the shutdown processing begins

(3) When [PLEASE POW OFF/SHUTDOWN COMP] shows up, press OFF (O) of the power switch.

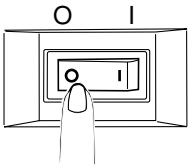

3.5.3 Installation of optional items

(1) Installation of expansion memory set

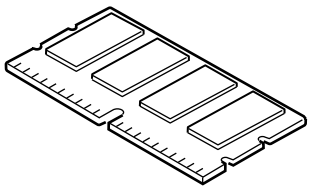

C6150/C6050/C5950/C5750 expansion memory

Model name	Memory volume (Total memory volume)
None (Standard)	256MB (256MB)
Option 256MB	+256MB (512MB)
Option 512MB	+512MB (768MB)

C5850/C5650 expansion memory

Model name	Memory volume (Total memory volume)
None (Standard)	64MB (64MB)
Option 64MB	+64MB (128MB)
Option 256MB	+256MB (320MB)

Note! • Be sure to use genuine OKI DATA parts. If any other parts are used, the printer will not function.
- Adding 64-MB memory is recommended for (600 x 600dpi x 2bit) banner-sheet printing. Added 64-MB memory may reduce the time for (600 x 1200dpi or 600 x 600 x 2bit) duplex printing.
- To conduct long print on the C6150/C6050/C5950/C5750, it is recommended to add a 256MB expansion memory.
- There is only one memory slot.
- The expansion memories for C6150/C6050/C5950/C5750 and those for C5850/C5650 are not compatible with each other.
- The expansion memories for C5850 are not compatible with those for C5200 series and C5800/C5600/C5500.

Turning OFF the printer power and disconnecting the power cord

Note! If an expansion memory is installed with the power switched ON, the printer may be broken.

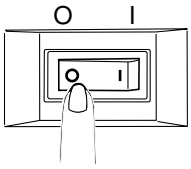

Opening the top cover and front cover

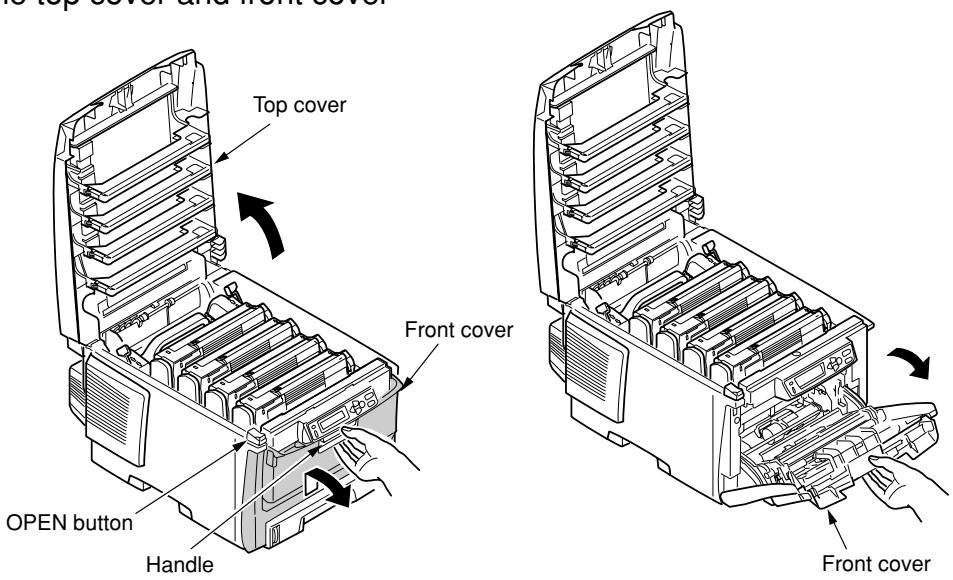

Remove Side Cover

1) Loosen the screw (1).
2) Remove the side cover.
   To remove the side cover, slide it while holding up its upper part.

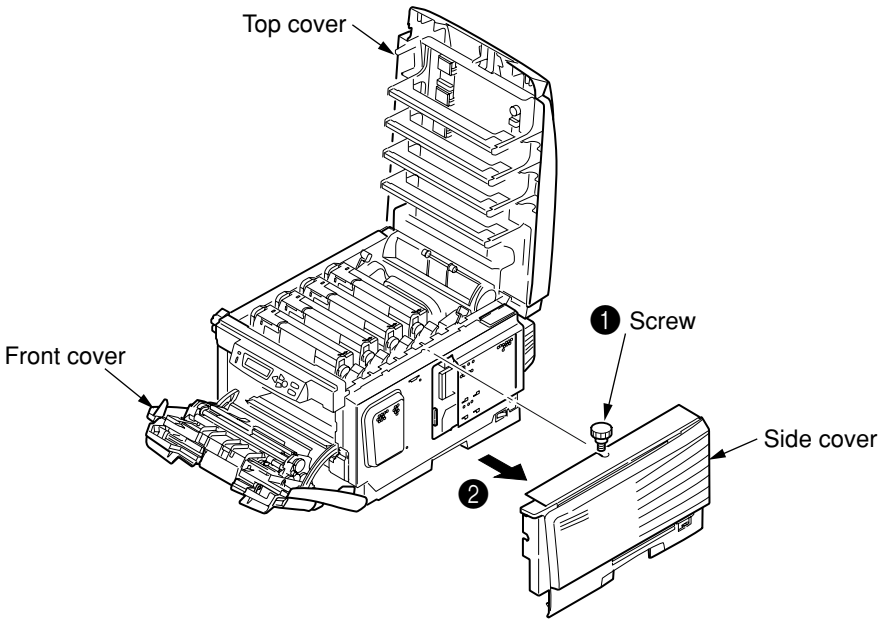

Installing the memory

On the C6150/C6050/C5950/C5750

1) Before taking the memory out of the bag, place the bag in contact with a metal part to fuser eliminate its static electricity.
2) Insert the memory into the idle slot.
3) Ensure that it is securely fastened by the right and left lock levers.

Note! • Do not touch the electronic parts and connector pins.
• Pay attention to the orientation of the memory. The terminal part of the memory has a notch, which is designed to engage with the connector of the slot.

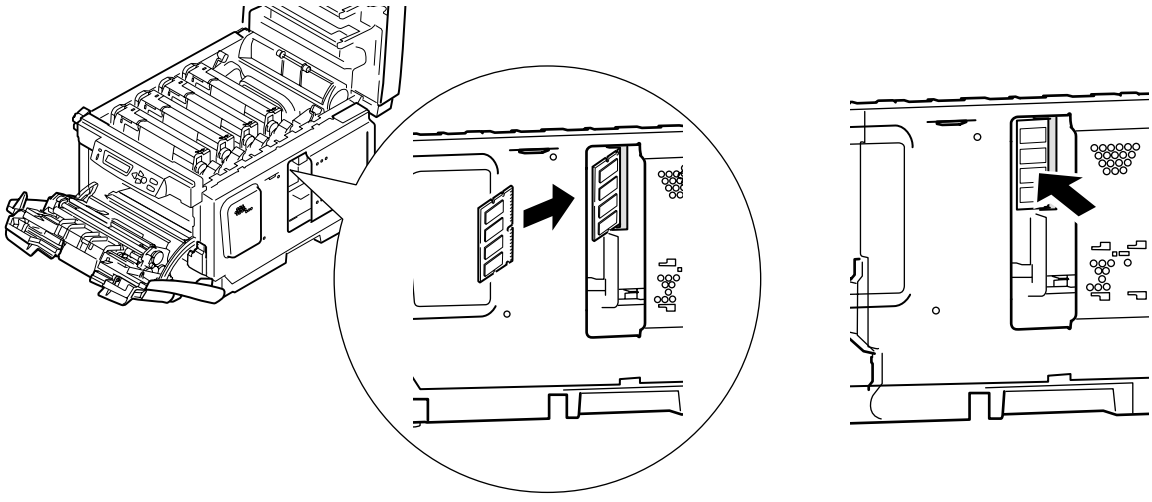

On the C5850/C5650

1) Before taking the memory out of the bag, place the bag in contact with a metal part to eliminate its static electricity.
2) Insert the memory into the idle slot.
3) Ensure that it is securely fastened by the right and left lock levers.

Note! • Do not touch the electronic parts and connector pins.
• Pay attention to the orientation of the memory. The terminal part of the memory has a notch, which is designed to engage with the connector of the slot.
• Be aware that the installed position of the memory is different from that on the C6150/C6050/C5950/C5750.

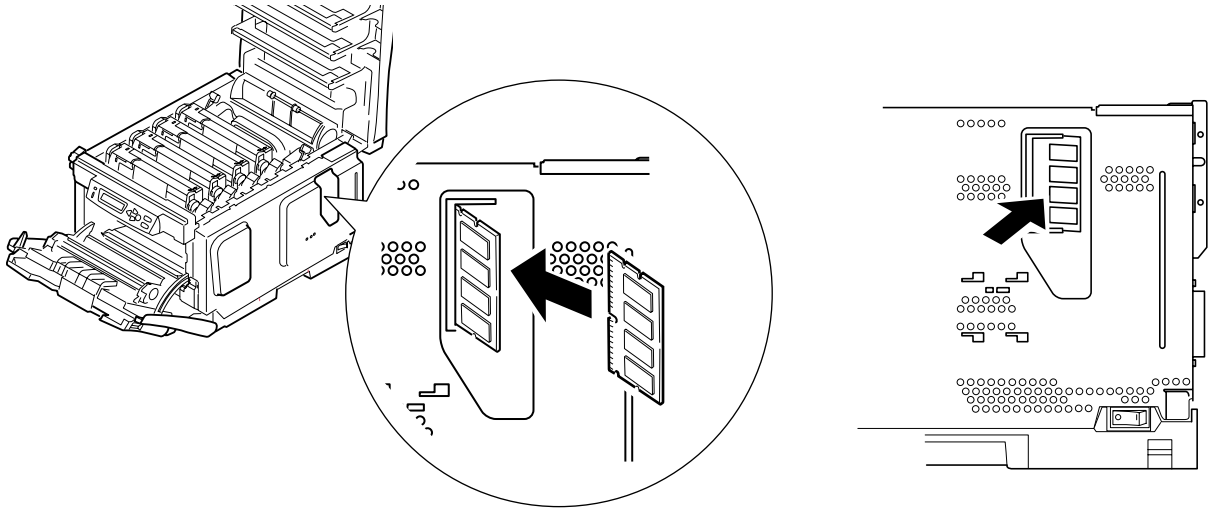

Attaching the side cover

1) Mount the side cover.
2) Fasten it with the screw (1).
3) Close the top cover and front cover.

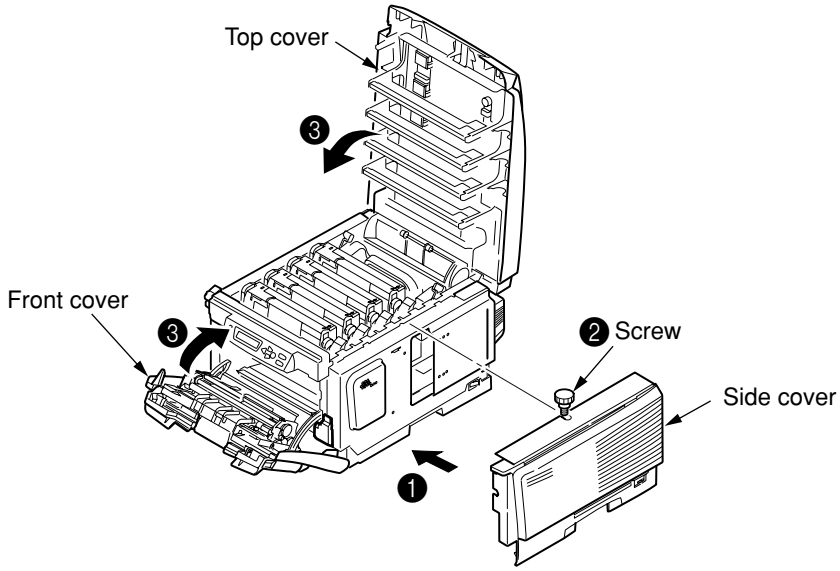

(2) Installation of second tray unit

This tray is intended to increase the amount of paper that can be loaded in the printer. It holds 530 sheets of 70kg ream weight paper, allowing to print 930 sheets continuously when combined with the standard paper cassette and multi-purpose tray.

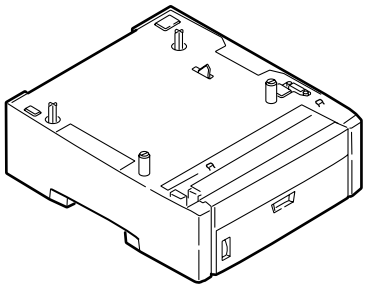

Turning OFF the printer power and disconnecting the power cord

Note! If an expansion memory is installed with the power switched ON, the printer may be broken.

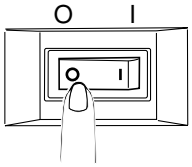

Placing the printer on the second tray unit.

Note! The printer weighs Approx. 29kg (with Duplex)/Approx. 26kg (w/o Duplex). It should be lifted up by two or more persons.

1) Align the holes in the bottom of the printer to the protrusions of the second tray unit.

2) Place the printer gently on the second tray unit.
To detach the second tray unit, follow the same procedure inversely.

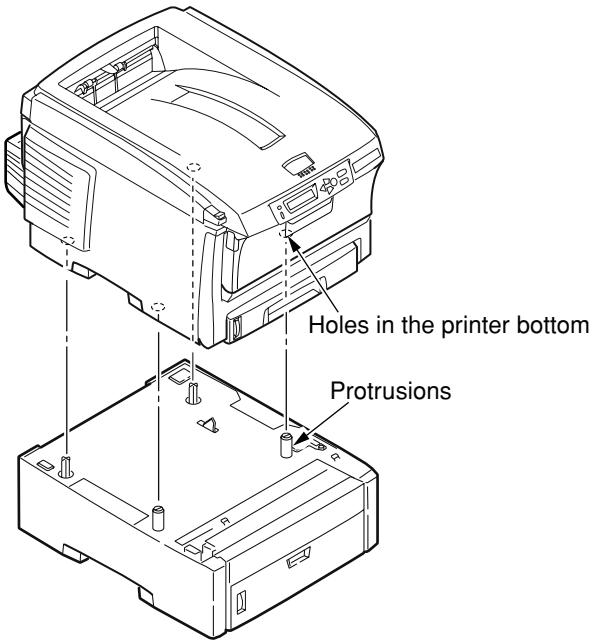

(3) Installation of duplex unit

This unit is used for printing on two sides of paper.

Note! For two-sided printing, it is recommended to add an expansion memory. For details, see "Expansion memories."

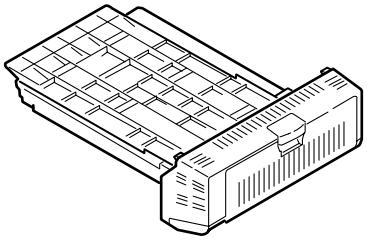

Turning OFF the printer power and disconnecting the power cord

Note! If an expansion memory is installed with the power switched ON, the printer may be broken.

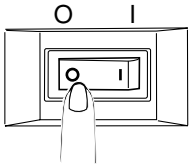

Peeling the protective tapes off the duplex unit

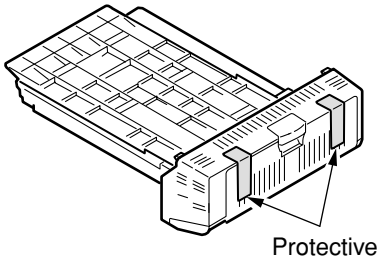

Install Duplex Unit

1) Insert the duplex unit into the lower part on the back of the printer as far as it will go.
2) Ensure that the claw on either side of the duplex unit is securely accommodated in the hole of the printer.

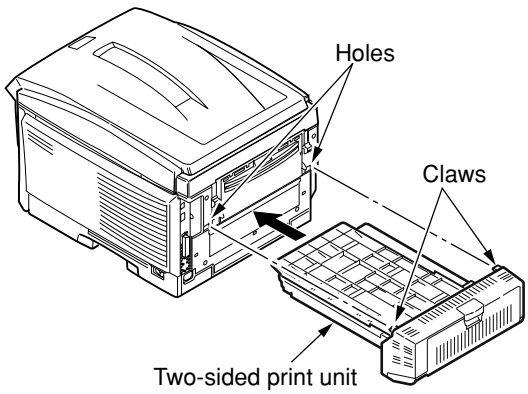

(4) Installation of built-in type hard disk (On C6150/C6050/C5950/C5750 only)

This is a built-in type hard disk to be added to the printer. It is used to conduct confirmation print, authentication print, to store print jobs, or to make buffer print, and also when the [COLLATE FAIL] is indicated in a section-by-section print. Fonts cannot be downloaded to it.

Note! When the printer has a built-in type hard disk installed, make certain to switch off the printer after executing the shutdown menu. If the power is turned off outright, the hard disk may be damaged and broken.

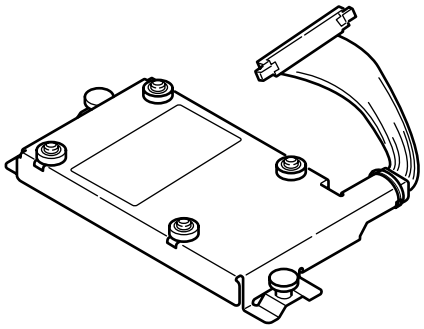

Memo The hard disk is segmented into the three partitions of "PCL," "Common" and "PSE." When the printer is shipped out of the factory or the hard disk is initialized, the following sizes are assigned to the partitions:

PCL	20%
Common	50%
PSE	30%

Turning OFF the printer power and disconnecting the power cord and printer cable

Note! If an expansion memory is installed with the power switched on, the printer may be broken.

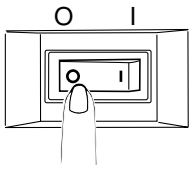

Opening the top cover and front cover

1) Open the top cover by pressing the OPEN button.

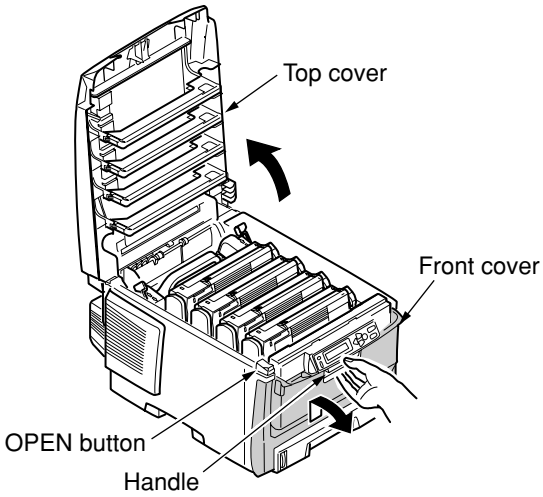

2) Push up the handle located in the center of the front cover and pull the front cover forward.

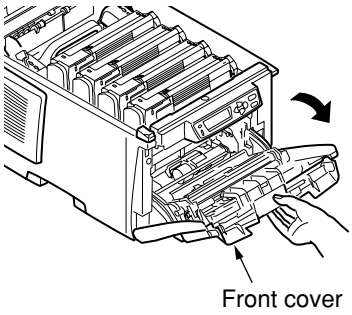

Note! The way the front cover is opened is different from that of the multi-purpose tray. (See figure below.)

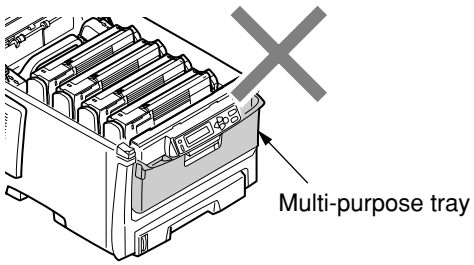

Detaching the side cover

1) Loosen the screw (1).
2) Remove the side cover.
   To remove the side cover, slide it while holding up its upper part.

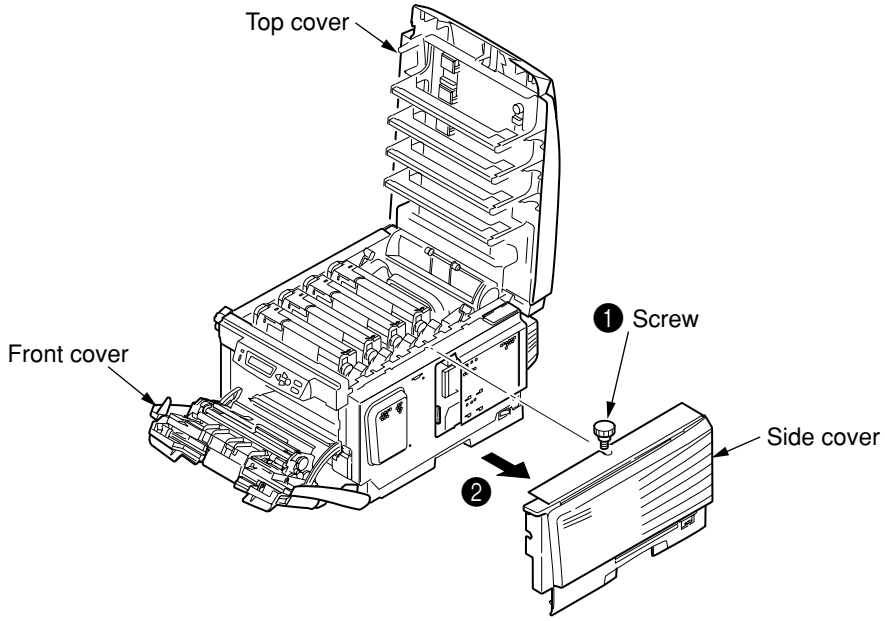

Memo If you have difficult detaching the side cover, check to see if the front cover is open.

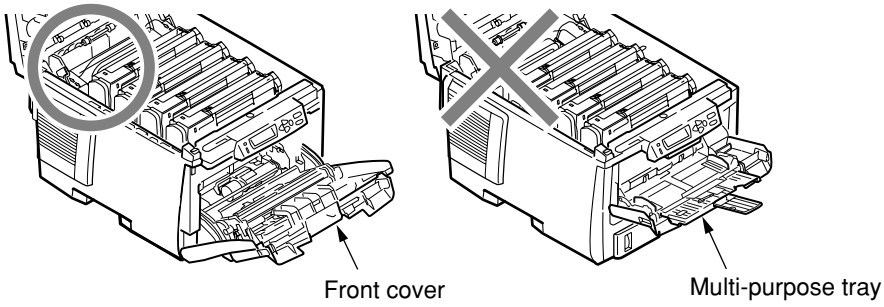

Installing the built-in type hard disk

1) Insert part "a" of the built-in type hard disk into hole "b" of the printer main body, and align the positions of the screw holes.
2) Install the two screws.
3) Push in the connector, until it snags in there with a click.

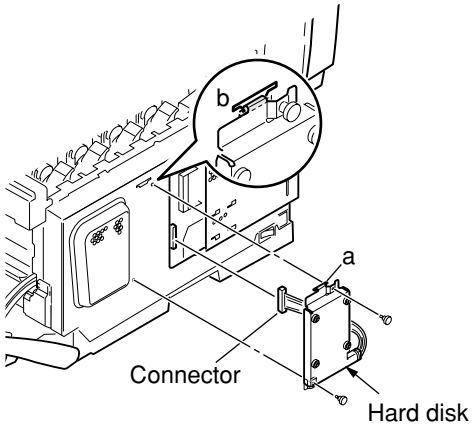

Attaching the side cover

1) Mount the side cover.
2) Fasten it with the screw (1).
3) Close the top cover and front cover.

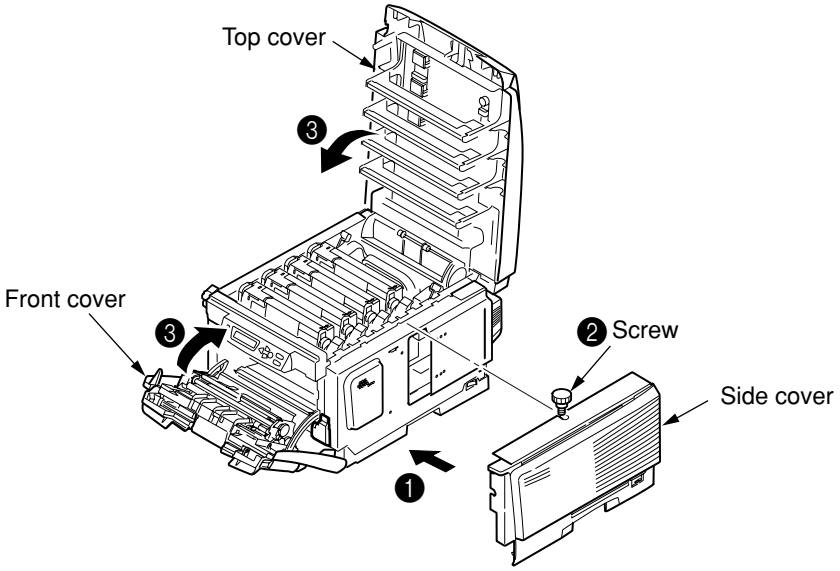

Connecting the power cord and printer cable to the printer, and turning on the power

Executing the Menu Map print, and ensuring that the built-in type hard disk has been installed properly.

1) Execute the Menu Map print.
   Conduct the Menu Map print by referring to "3.6 Menu Map print."
2) Ensure that the capacity of the built-in type hard disk is indicated in "HDD."

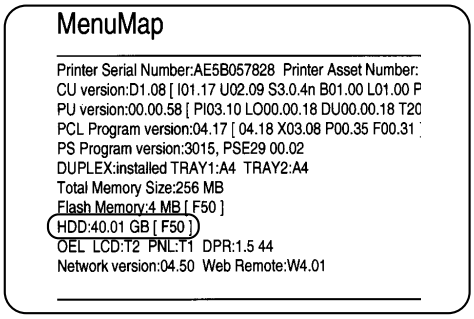

Memo The capacity of the hard disk may be different from the example shown above.

Note! If no HDD capacity is indicated, redo the installation of the built-in type hard disk.

Then, setting needs to be made with the printer driver to have the built-in type hard disk recognized. If there is no printer driver set up, see Sections 3 to 9 of the Setup Part of the User's Manual, and set up the printer driver. Then, make the setting.

3.5.4 Confirmation of recognition of optional items

To check to see whether or not the optional items have been installed properly, execute the Menu Map print by referring to "3.6 Menu Map print.

(1) Confirmation of recognition of expansion memory

Checking the contents of the Menu Map.
Check the total memory volume indicated in "Total Memory Size" of the header.

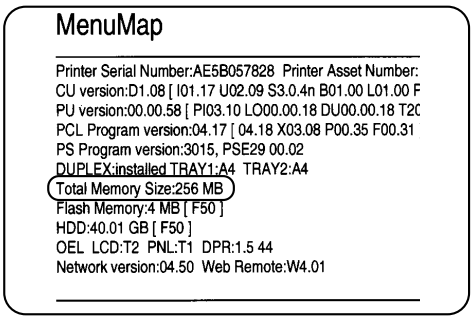

(2) Confirmation of recognition of second tray

<Confirmation of recognition of second tray>
Check the contents of the Menu Map.
Ensure that "Tray 2" is displayed in "Media Menu."

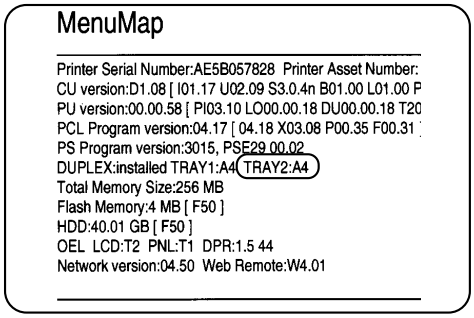

(3) Confirmation of recognition of duplex unit

<Confirmation of recognition of duplex unit>
Check the contents of the Menu Map.
Ensure that [Ryomen insatus: installed] is displayed in the header section.

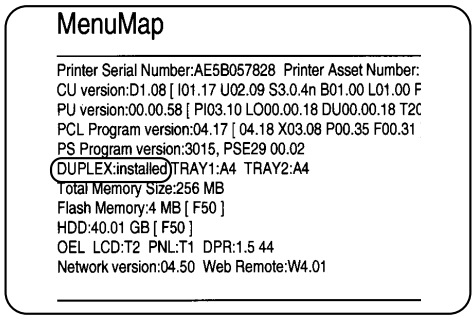

3.6 Menu Map print

This print is intended to ensure that the printer operates normally.

On the C6150/C6050/C5950/C5850/C5750/C5650

1) Load A4 paper in the tray.
2) Press the + "Menu +" switch several times to cause [Information Menu] to be displayed.
3) Press the "Set" switch to cause [PRINT MENU MAP/EXECUTE] to appear.
4) Press the "Set" switch.

The Menu Map print will get under way. (Two pages on the C5950, and one on the C5850)

When [Network] is displayed and the "Set" switch is pressed in (3) above, network information will be printed.

Or, press and hold down for two seconds or longer the push switch above the network connector on the back of the printer main unit.

(Sample) Example on C5950

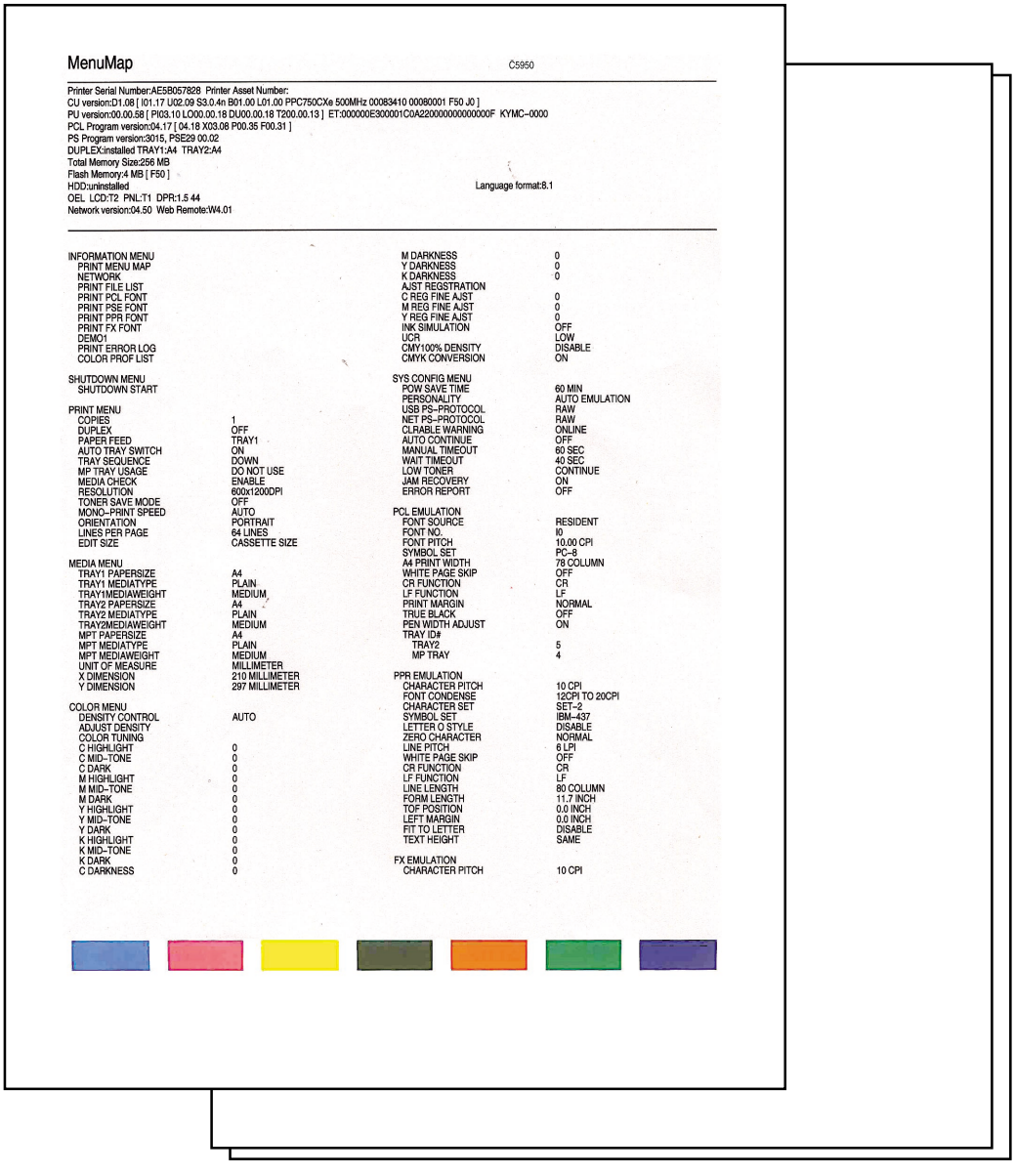

MenuMap C5950

Printer Serial Number:AE5B057828 Printer Asset Number:
CU version:D1.08 [I01.17 U02.09 S3.0.4n B01.00 L01.00 PPC750CXe 500MHz 00083410 00080001 F50 J0]
PU version:00.00.58 [PI03.10 LO00.00.18 DU00.00.18 T200.00.13] ET:000000E300001C0A2200000000000000F KYMC-0000
PCL Program version:04.17 [04.18 X03.08 P00.35 F00.31]
PS Program version:3015, PSE29 00.02
DUPLEX:installed TRAY1:A4 TRAY2:A4
Total Memory Size:256 MB
Flash Memory:4 MB [F50]
HDD:uninstalled
Language format:8.1
OEL LCD:T2 PNL:T1 DPR:1.5 44
Network version:04.50 Web Remote:W4.01

INFORMATION MENU	
PRINT MENU MAP	
NETWORK	
PRINT FILE LIST	
PRINT PCL FONT	
PRINT PSE FONT	
PRINT PPR FONT	
PRINT FX FONT	
DEMO1	
PRINT ERROR LOG	
COLOR PROF LIST	
SHUTDOWN MENU	
SHUTDOWN START	
PRINT MENU	
COPIES	1
DUPLEX	OFF
PAPER FEED	TRAY1
AUTO TRAY SWITCH	ON
TRAY SEQUENCE	DOWN
MP TRAY USAGE	DO NOT USE
MEDIA CHECK	ENABLE
RESOLUTION	600x1200DPI
TONER SAVE MODE	OFF
MONO-PRINT SPEED	AUTO
ORIENTATION	PORTRAIT
LINES PER PAGE	64 LINES
EDIT SIZE	CASSETTE SIZE
MEDIA MENU	
TRAY1 PAPERSIZE	A4
TRAY1 MEDIATYPE	PLAIN
TRAY1MEDIAWEIGHT	MEDIUM
TRAY2 PAPERSIZE	A4
TRAY2 MEDIATYPE	PLAIN
TRAY2MEDIAWEIGHT	MEDIUM
MPT PAPERSIZE	A4
MPT MEDIATYPE	PLAIN
MPT MEDIAWEIGHT	MEDIUM
UNIT OF MEASURE	MILLIMETER
X DIMENSION	210 MILLIMETER
Y DIMENSION	297 MILLIMETER
COLOR MENU	
DENSITY CONTROL	AUTO
ADJUST DENSITY	
COLOR TUNING	
C HIGHLIGHT	0
C MID-TONE	0
C DARK	0
M HIGHLIGHT	0
M MID-TONE	0
M DARK	0
Y HIGHLIGHT	0
Y MID-TONE	0
Y DARK	0
K HIGHLIGHT	0
K MID-TONE	0
K DARK	0
C DARKNESS	0
M DARKNESS	0
Y DARKNESS	0
K DARKNESS	0
AJST REGSTRATION	
C REG FINE AJST	0
M REG FINE AJST	0
Y REG FINE AJST	0
INK SIMULATION	OFF
UCR	LOW
CMY100% DENSITY	DISABLE
CMYK CONVERSION	ON
SYS CONFIG MENU	
POW SAVE TIME	60 MIN
PERSONALITY	AUTO EMULATION
USB PS-PROTOCOL	RAW
NET PS-PROTOCOL	RAW
CLRABLE WARNING	ONLINE
AUTO CONTINUE	OFF
MANUAL TIMEOUT	60 SEC
WAIT TIMEOUT	40 SEC
LOW TONER	CONTINUE
JAM RECOVERY	ON
ERROR REPORT	OFF
PCL EMULATION	
FONT SOURCE	RESIDENT
FONT NO.	I0
FONT PITCH	10.00 CPI
SYMBOL SET	PC-8
A4 PRINT WIDTH	78 COLUMN
WHITE PAGE SKIP	OFF
CR FUNCTION	CR
LF FUNCTION	LF
PRINT MARGIN	NORMAL
TRUE BLACK	OFF
PEN WIDTH ADJUST	ON
TRAY ID#	
TRAY2	5
MP TRAY	4
PPR EMULATION	
CHARACTER PITCH	10 CPI
FONT CONDENSE	12CPI TO 20CPI
CHARACTER SET	SET-2
SYMBOL SET	IBM-437
LETTER O STYLE	DISABLE
ZERO CHARACTER	NORMAL
LINE PITCH	6 LPI
WHITE PAGE SKIP	OFF
CR FUNCTION	CR
LF FUNCTION	LF
LINE LENGTH	80 COLUMN
FORM LENGTH	11.7 INCH
TOF POSITION	0.0 INCH
LEFT MARGIN	0.0 INCH
FIT TO LETTER	DISABLE
TEXT HEIGHT	SAME
FX EMULATION	
CHARACTER PITCH	10 CPI

(Sample) Example on C5850

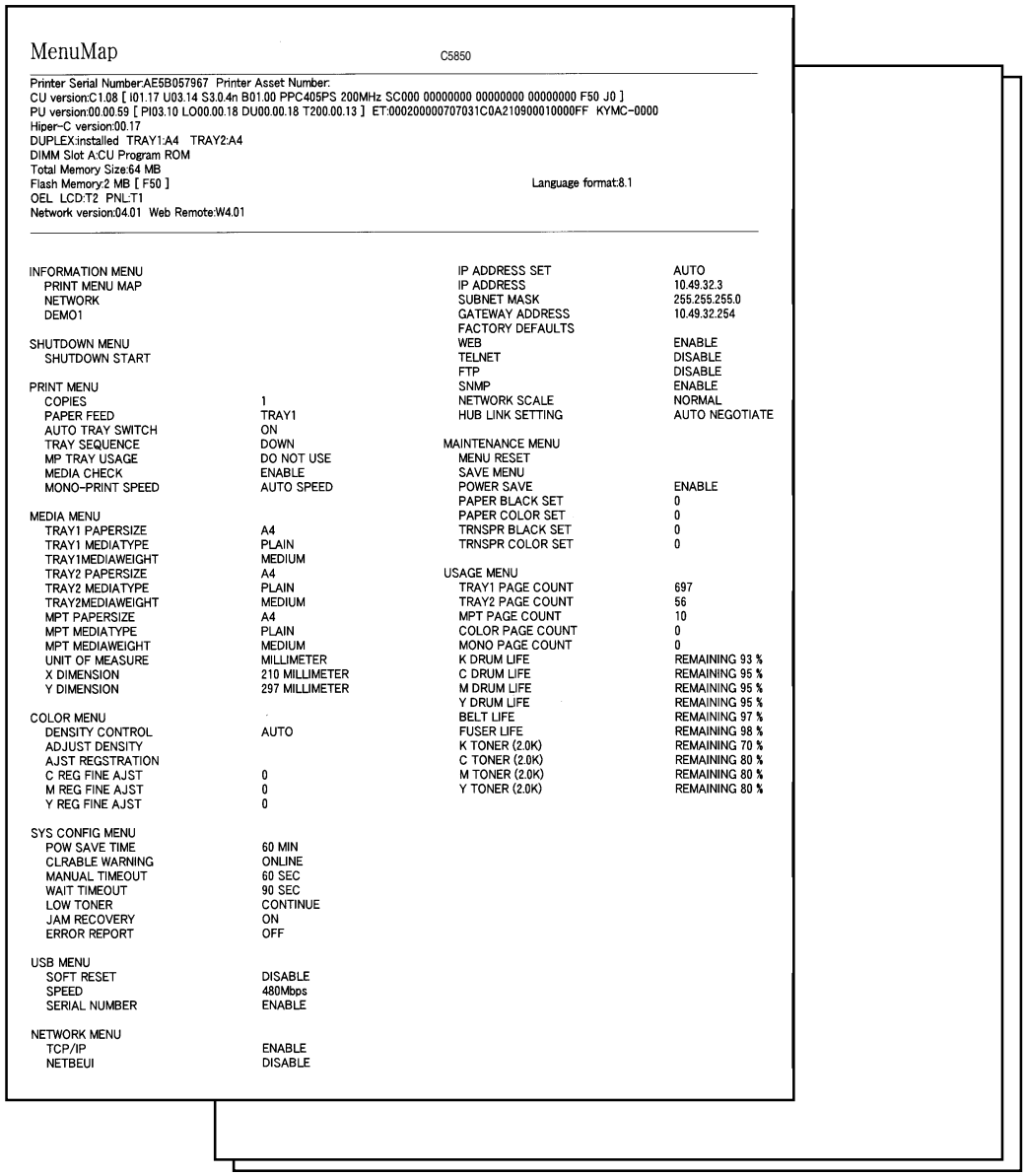

MenuMap C5850

Printer Serial Number:AE5B057967 Printer Asset Number:
CU version:C1.08 [I01.17 U03.14 S3.04n B01.00 PPC405PS 200MHz SC000 00000000 00000000 00000000 F50 J0]
PU version:00.00.59 [PI03.10 LO00.00.18 DU00.00.18 T200.00.13] ET:000200000707031C0A2109000100000FF KYMC-0000
Hiper-C version:00.17
DUPLEX:installed TRAY1:A4 TRAY2:A4
DIMM Slot A:CU Program ROM
Total Memory Size:64 MB
Flash Memory:2 MB [F50] Language format:8.1
OEL LCD:T2 PNL:T1
Network version:04.01 Web Remote:W4.01

INFORMATION MENU	
PRINT MENU MAP	
NETWORK	
DEMO1	
SHUTDOWN MENU	
SHUTDOWN START	
PRINT MENU	
COPIES	1
PAPER FEED	TRAY1
AUTO TRAY SWITCH	ON
TRAY SEQUENCE	DOWN
MP TRAY USAGE	DO NOT USE
MEDIA CHECK	ENABLE
MONO-PRINT SPEED	AUTO SPEED
MEDIA MENU	
TRAY1 PAPERSIZE	A4
TRAY1 MEDIATYPE	PLAIN
TRAY1MEDIAWEIGHT	MEDIUM
TRAY2 PAPERSIZE	A4
TRAY2 MEDIATYPE	PLAIN
TRAY2MEDIAWEIGHT	MEDIUM
MPT PAPERSIZE	A4
MPT MEDIATYPE	PLAIN
MPT MEDIAWEIGHT	MEDIUM
UNIT OF MEASURE	MILLIMETER
X DIMENSION	210 MILLIMETER
Y DIMENSION	297 MILLIMETER
COLOR MENU	
DENSITY CONTROL	AUTO
ADJUST DENSITY	
AJST REGSTRATION	
C REG FINE AJST	0
M REG FINE AJST	0
Y REG FINE AJST	0
SYS CONFIG MENU	
POW SAVE TIME	60 MIN
CLRABLE WARNING	ONLINE
MANUAL TIMEOUT	60 SEC
WAIT TIMEOUT	90 SEC
LOW TONER	CONTINUE
JAM RECOVERY	ON
ERROR REPORT	OFF
USB MENU	
SOFT RESET	DISABLE
SPEED	480Mbps
SERIAL NUMBER	ENABLE
NETWORK MENU	
TCP/IP	ENABLE
NETBEUI	DISABLE
IP ADDRESS SET	AUTO
IP ADDRESS	10.49.32.3
SUBNET MASK	255.255.255.0
GATEWAY ADDRESS	10.49.32.254
FACTORY DEFAULTS	
WEB	ENABLE
TELNET	DISABLE
FTP	DISABLE
SNMP	ENABLE
NETWORK SCALE	NORMAL
HUB LINK SETTING	AUTO NEGOTIATE
MAINTENANCE MENU	
MENU RESET	
SAVE MENU	
POWER SAVE	ENABLE
PAPER BLACK SET	0
PAPER COLOR SET	0
TRNSPR BLACK SET	0
TRNSPR COLOR SET	0
USAGE MENU	
TRAY1 PAGE COUNT	697
TRAY2 PAGE COUNT	56
MPT PAGE COUNT	10
COLOR PAGE COUNT	0
MONO PAGE COUNT	0
K DRUM LIFE	REMAINING 93 %
C DRUM LIFE	REMAINING 95 %
M DRUM LIFE	REMAINING 95 %
Y DRUM LIFE	REMAINING 95 %
BELT LIFE	REMAINING 97 %
FUSER LIFE	REMAINING 98 %
K TONER (2.0K)	REMAINING 70 %
C TONER (2.0K)	REMAINING 80 %
M TONER (2.0K)	REMAINING 80 %
Y TONER (2.0K)	REMAINING 80 %

3.7 Connection methods

<USB connection>

Preparing a USB cable

Note! • No printer cable is supplied with the printer. Provide one separately.
• Prepare a USB type cable separately.
• When connection is to be made in "Hi-Speed" mode of USB2.0, use a USB cable conforming to the Hi-Speed specification.

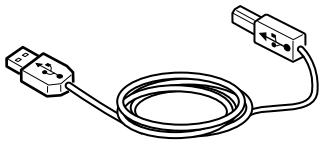

Switching OFF the printer and computer

Memo The USB cable can be plugged in or unplugged with the computer and printer switched ON. However, to be able to conduct the subsequent installation of the printer driver and USB driver securely, the power to the printer should be turned OFF.

Interconnecting the computer and the printer

1) Plug the USB cable into the USB interface connector of the printer.
2) Plug the USB cable into the USB interface connector of the computer.

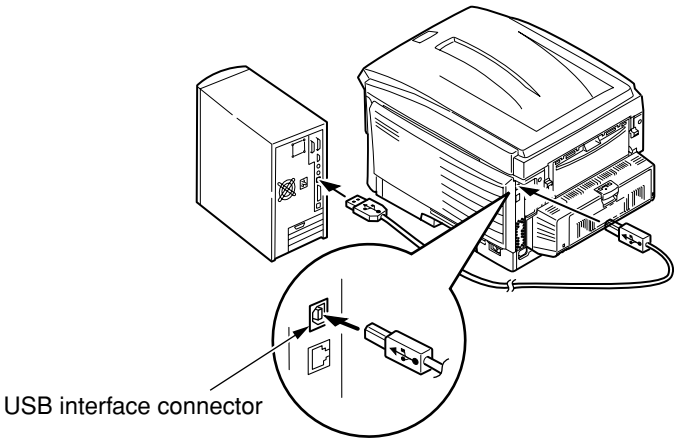

Note! Be careful not to plug the USB cable into the network interface connector. Such wrong connection could cause malfunction.

<Parallel Connection> (Centronics I/F model)

1. Prepare a parallel cable.

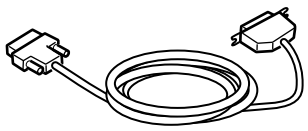

2. Power off Printer and Personal Computer

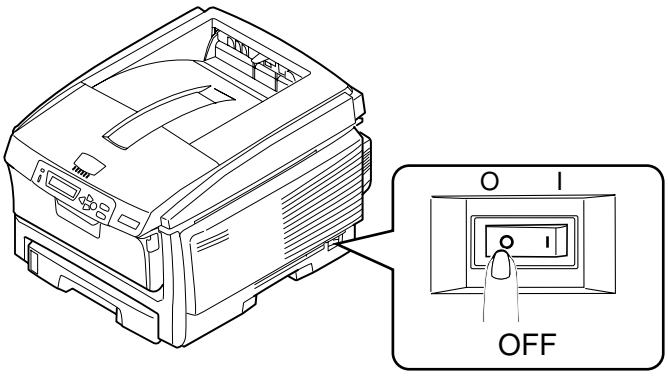

3. Connect Personal Computer and Printer

   (1) Connect a parallel cable into a parallel interface connector of printer and use metal fittings to secure the cable.

   (2) Connect a parallel cable into a parallel interface connector of PC and use screw to secure the cable.

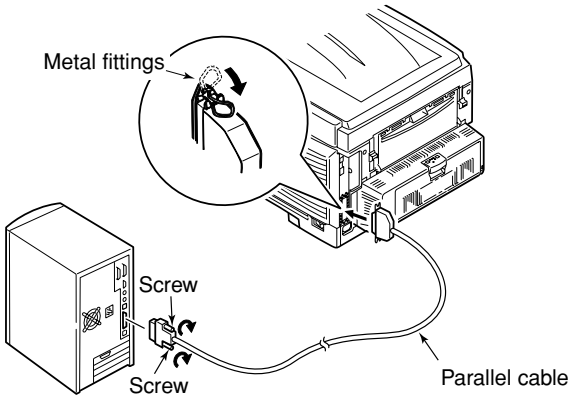

<LAN cable connection>

Preparing a LAN cable

Switching off the printer and computer

1) Plug the Ethernet cable into the Network interface connector of the printer.
2) Insert the Ethernet cable into the hub.

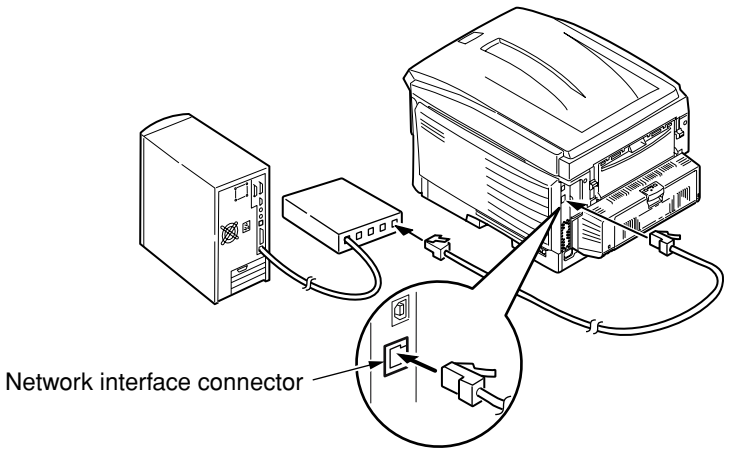

3.8 Confirmation of paper used by the user

Load the media used by the user in the printer, make Media Type/Weight settings, execute the Menu Map/Demo print, and check to make sure that the printouts are free from toner flaking.

Types	Weight	Setting values of the operation panel		Setting *2 for [Media weight] of the printer driver
		Media weight	Media type *1	
Regular paper*3	55-64kg (64-74g/m^2)	Light	Light	Light
	65-89kg (75-104g/m^2)	Medium		Medium
	90-103kg (105-120g/m^2)	Heavy		Heavy
	104-172kg (121-200g/m^2)	Ultra heavy		Ultra heavy
Postcard*4	-	-	-	-
Envelope*4	-	-	-	-
Label paper	Less than 0.1-0.17mm	Thicker paper	Label paper	Label paper 1
	0.17-0.2mm	Thickest paper		Label paper 2
Transparency *5 film	-	-	Transparency film	Transparency film

*1: The printer comes with Media Type set to [Light] at the factory.
*2: The thickness and type of paper can be set on the operator panel and also via the printer driver. If those parametersare set via the printer driver, the settings of the printer driver will have priority. If [Auto selectio] is selected in [Feed Trey] of the printer driver, or [Printer setting] is selected in [Media weight] , the print will take place with the settings made on the operator panel.
*3: The paper thickness with which two-sided print can be conducted is from 65 to 90kg (75 to 105g/m^2) of ream weight.
*4: For postcards and envelopes, there is no setting of Media Weight or Media Type.
*5: For OHP sheets, Media Type only is set. There is no need to make setting in Media Weight.

Memo If [Heavy] or [Ultra heavy] is selected in Media Weight, or [Label paper] or [OHP] in Media Type, the print speed will be affected.

4. REPLACEMENT OF PARTS

This section explains the field replacement procedures for parts, assemblies and component units. While those replacement procedures refer to the disassembling of parts, follow the same procedures inversely for reassembling them.
The part numbers (1, 2, etc.) employed in this manual are different from those assigned in the corresponding configuration diagrams of Disassembly for Maintenance (43827101TL) and RSPL (43827101TR).

4.1 Precautions on the replacement of parts

(1) Prior to replacing a part, be sure to disconnect the AC cord and interface cable.
(a) To disconnect the AC cord, always follow the procedure described below:
1 Turn off ("O") the power switch of the printer.
2 Pull out the AC plug of the AC cord from the AC power outlet.
3 Pull out the earth wire from the earth terminal of the AC power outlet.
4 Unplug the AC cord and interface cable from the printer.

⚠Warning	Risk of Electric Shock	

There is a risk of electric shock during replacement of the low voltage power supply.

Use insulating gloves or avoid direct contact with any conducting part of the power supply, and caution should be exercised during replacement.

The capacitor may take one minute to complete discharge after the AC cord is unplugged. Also, there is a possibility that the capacitor doesn't discharge because of a breakage of the PCB, etc., so remember the possibility of electric shock to avoid electric shock.

(b) To reconnect the printer, always follow the procedure described below:
1 Plug the AC cord and interface cable into the printer.
2 Insert the earth wire into the earth terminal of the AC power outlet.
3 Insert the AC plug into the AC power outlet.
4 Turn on ("|") the power switch of the printer.

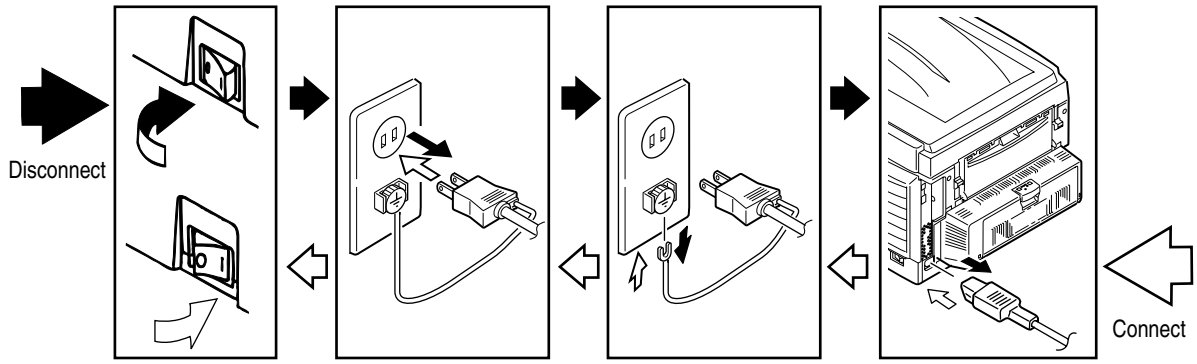

(2) Do not disassemble the printer as long as it is operating normally.

(3) Limit disassembly to a necessary minimum. Do not remove other parts than those specified in the part replacement procedure.

(4) Use the designated maintenance tools.

(5) Conduct disassembly by following the specified sequential order. Failure to observe this order could damage the parts.

(6) Screws, collars and other small parts should be attached provisionally to their original positions, since they are liable to be lost.

(7) When handling a microprocessor, ROM, RAM and other ICs and circuit boards, do not wear gloves that tend to generate static electricity.

(8) Printed-circuit boards should not be placed directly on an equipment or floor.

[Maintenance Tools]

Table 4-1-1 indicates the tools necessary to replace printed-circuit boards and component units.

Table 4-1-1 Maintenance Tools

No.	Service Tools		Q' ty	Place of use	Remarks
1	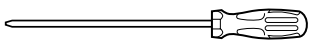	No. 2-200 Philips screwdriver, Magnetized	1	3~5 mm screws	
2	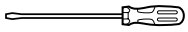	No. 3-100 screwdriver	1		
3	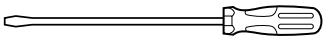	No. 5-200 screwdriver	1		
4	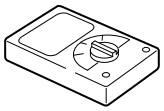	Digital multimeter	1		
5	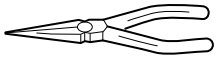	Pliers	1		
6	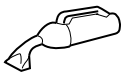	Handy cleaner	1		Reter to the following note.
7		LED Head cleaner P/N 4PB4083-2248P001	1	Cleans LED head	
8	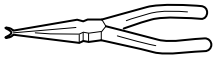	E-ring pliers	1		

Note! Use a vacuum cleaner dealing with toner. Using a common vacuum cleaner may cause fire.

Table 4-1-2 indicates the tools necessary for using maintenance utilities.

Table 4-1-2 Maintenance Tools

No.	Service Tools		Q' ty	Place of use	Remarks
1		Laptop computer [Must have maintenance utilities installed]	1		
2	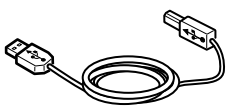	USB cable	1		

4.2 Part replacement methods

This subsection explains the replacement methods for the parts and assemblies illustrated in the disassembly system diagram below.

4.2.1 Left side cover

(1) Open the top cover.

(2) Open the feeder unit.

(3) Remove screw (silver) 1, and detach left side cover 2.

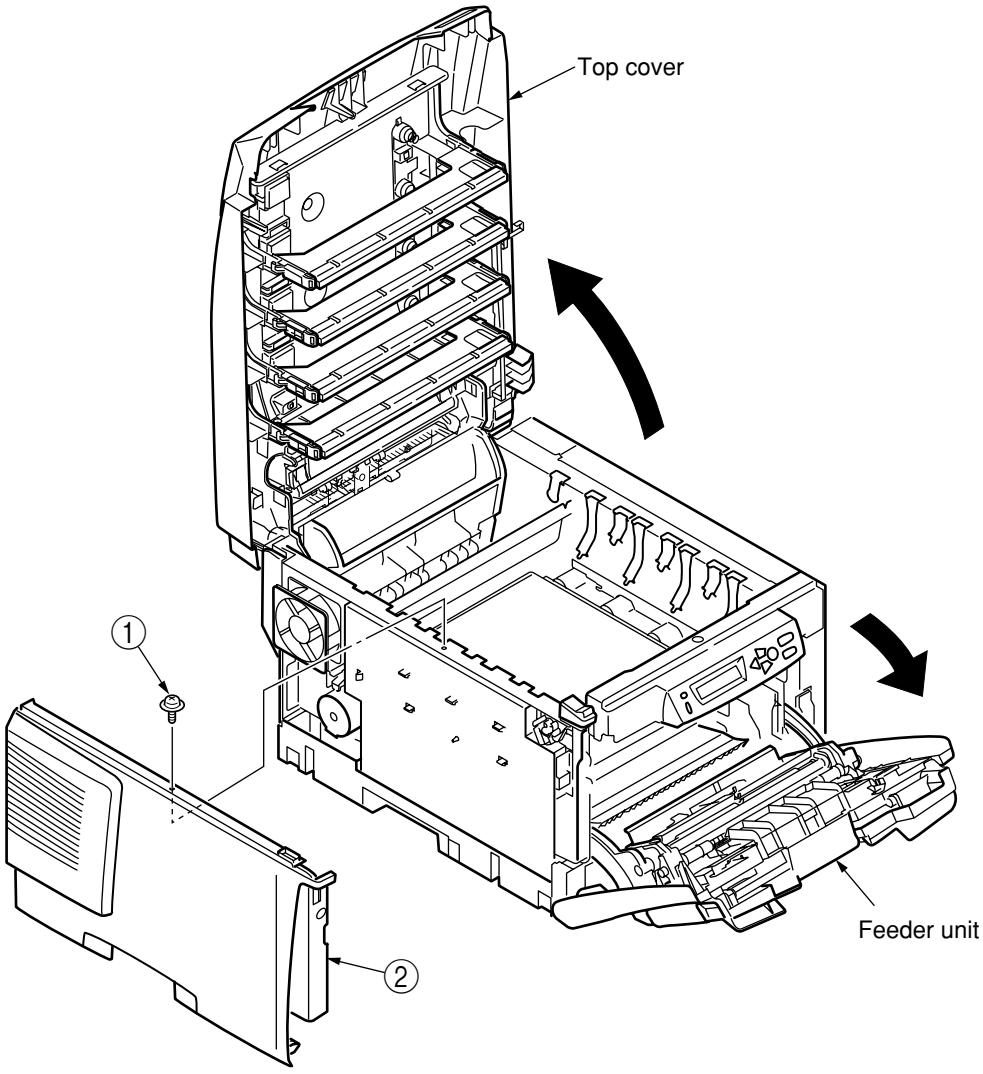

Figure 4-2-1 Left side cover

4.2.2 Right side cover

(1) Open the top cover.

(2) Open the feeder unit.

(3) Loosen screw 1, and detach right side cover 2.

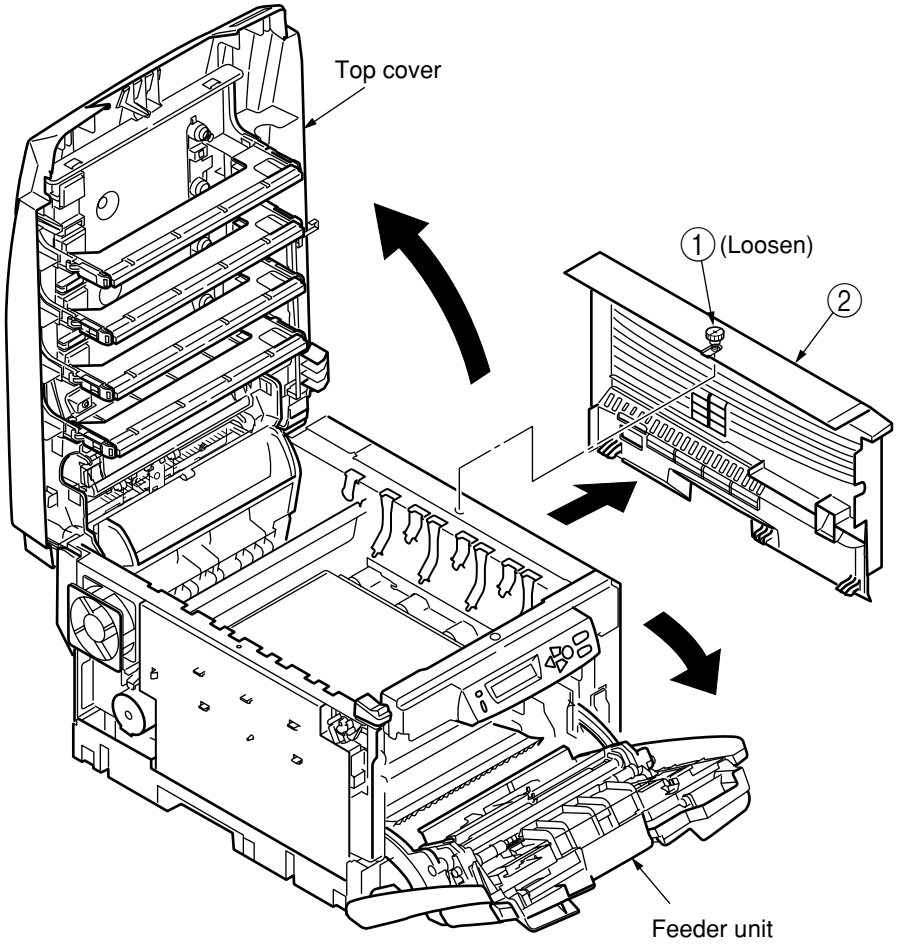

Figure 4-2-2 Right side cover

4.2.3 Face-Up Tray

(1) Open face-up tray 1 into the direction of the arrow, free the engagement on either side of it while deflecting the tray, and remove the tray.

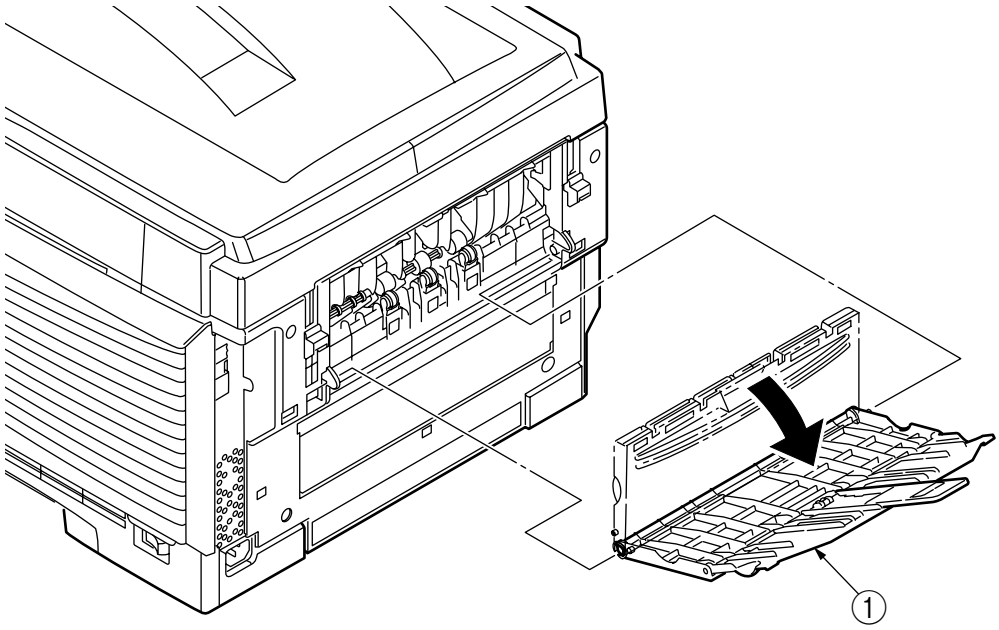

Figure 4-2-3 Face-Up Tray

4.2.4 Rear cover

(1) Open the face-up tray.

(2) Remove two screws (silver) ①.

(3) Insert the flat-tipped screwdriver into hole A, as illustrated in Figure (2), and release two claws A.

(4) Now, release two claws B, and pull the upper part of rear cover ② in the direction of arrow A.

(5) Push the lower part of rear cover ② in the direction of arrow B, as shown in Figure (3), and detach rear cover ② by freeing three claws C.

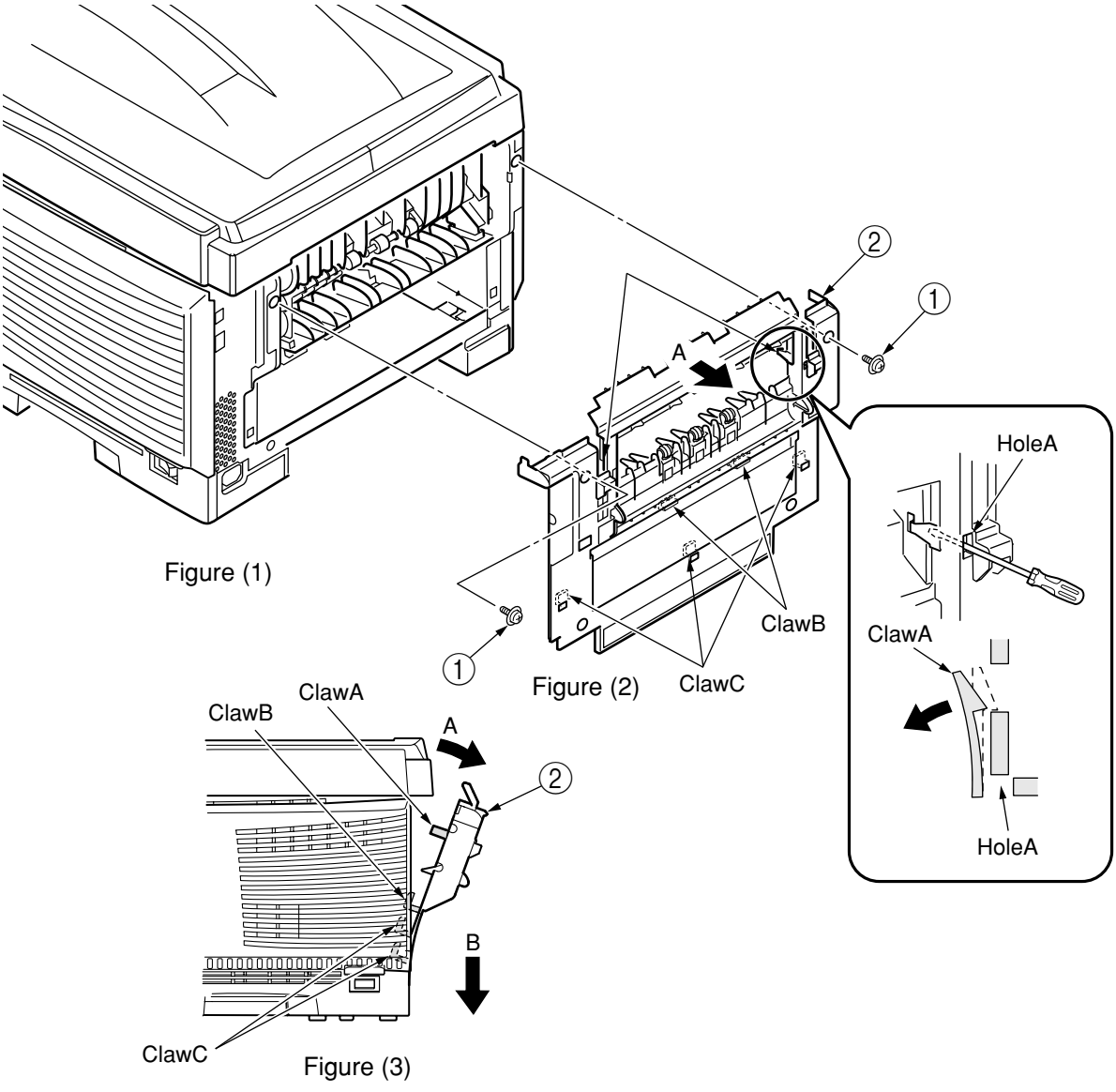

Figure 4-2-4 Rear Cover

4.2.5 LED Assy/LED Assy springs

(1) Open the top cover.

(2) After disconnecting the cable, first free hook part A by applying force in the direction of the arrow, as illustrated in Figure (2), and then, free hook part B, to finally remove LED Assy ①.

(In this operation, two springs②will come out together with LED Assy ①.)

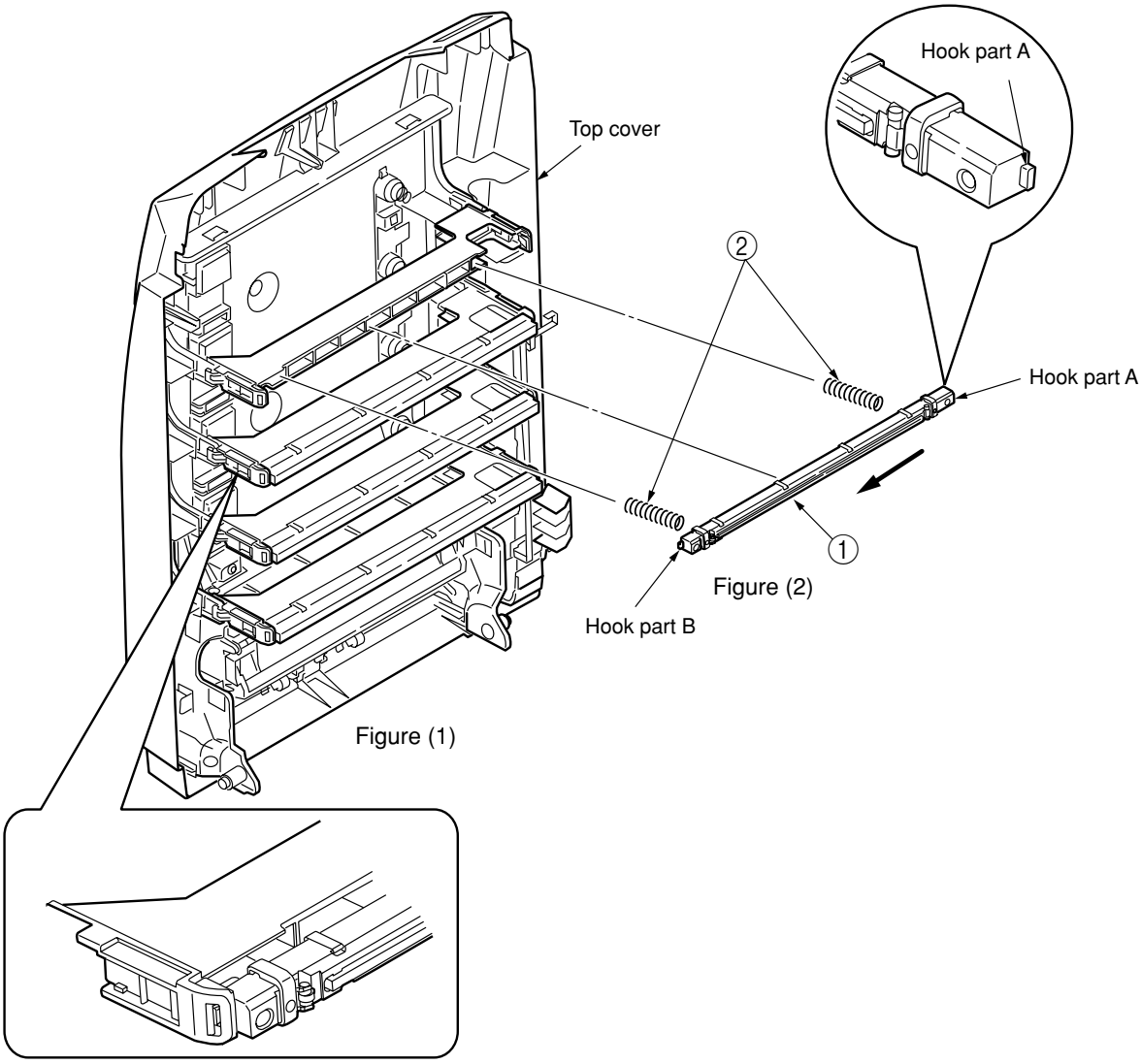

Figure 4-2-5 LED Assy / LED Assy-Springs

4.2.6 CU PCB

C6150/C6050/C5950/C5750

(1) Open the top cover.

(2) Detach the right side cover. (See Subsection 4.2.2.)

(3) Remove eight screws (silver) ①, and detach plate shield assembly (PDL) ② by releasing connector claws A.

(4) Remove screw ③, and disconnect head cable ④.

(5) Remove seven screws (silver) ⑤, disconnect all the cables, and disassemble PDL CU PCB ⑥ .

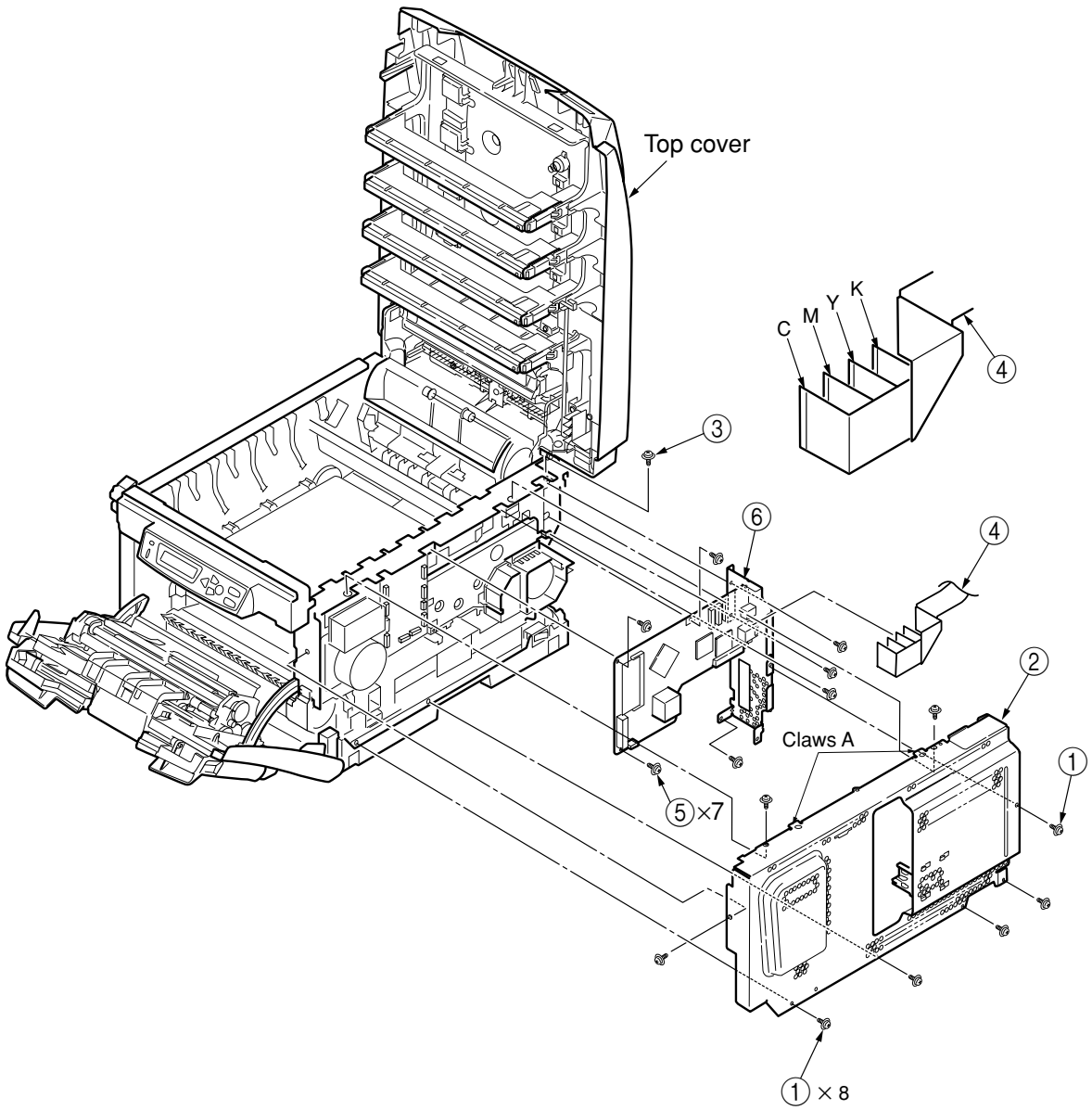

Figure 4-2-6-1 Controller PCB (C5950)

C5850/C5650

(1) Open the top cover.

(2) Detach the right side cover. (See Subsection 4.2.2.)

(3) Remove eight screws (silver) ①, and detach plate shield Assy(GDI)② by releasing claws A.

(4) Remove screw (silver) ③, and disconnect head cable ④.

(5) Remove seven screws (silver) ⑤, disconnect all the cables, and disassemble GDI CU PCB ⑥.

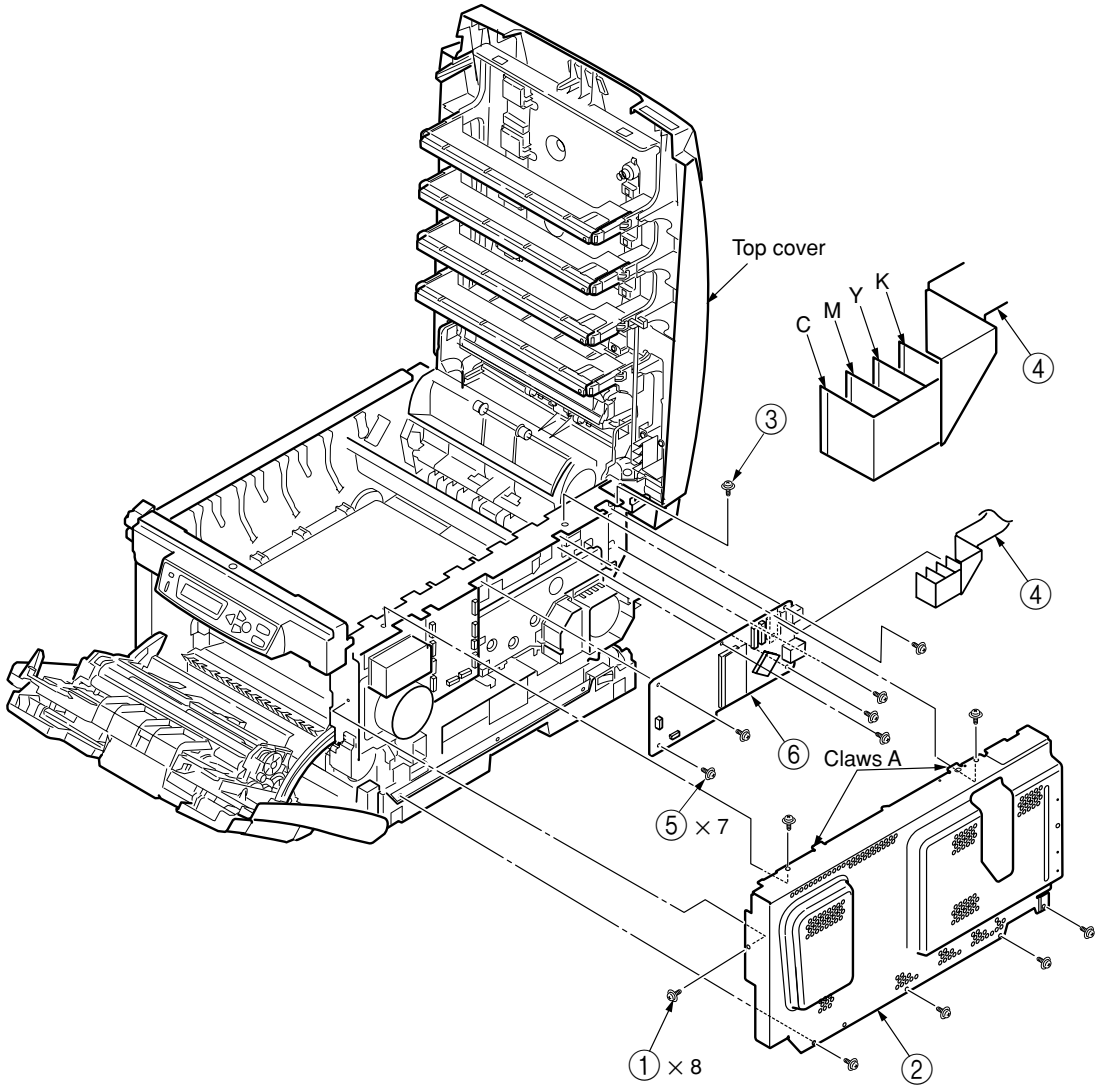

Figure 4-2-6-2 Controller PCB (C5850)

4.2.7 Print engine controller PCB

(1) Remove the plate shield Assy(PCL/GDI). (See Subsection 4.2.6 (1) through (3).)

(2) Remove all the connectors and two screws (silver) ①, and disassemble the print engine controller PCB ②.

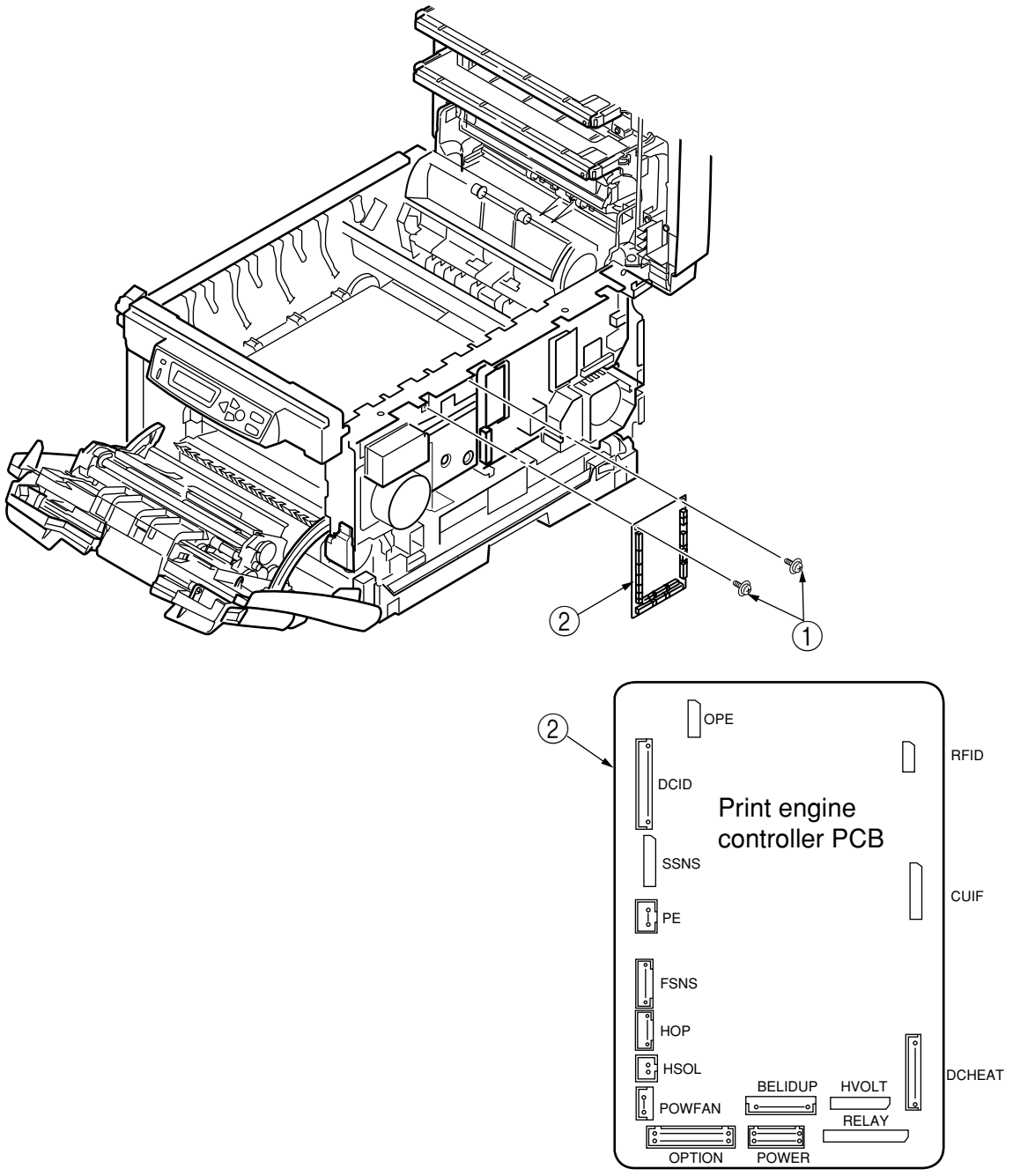

Figure 4-2-7-1 Print Engine Controller PCB

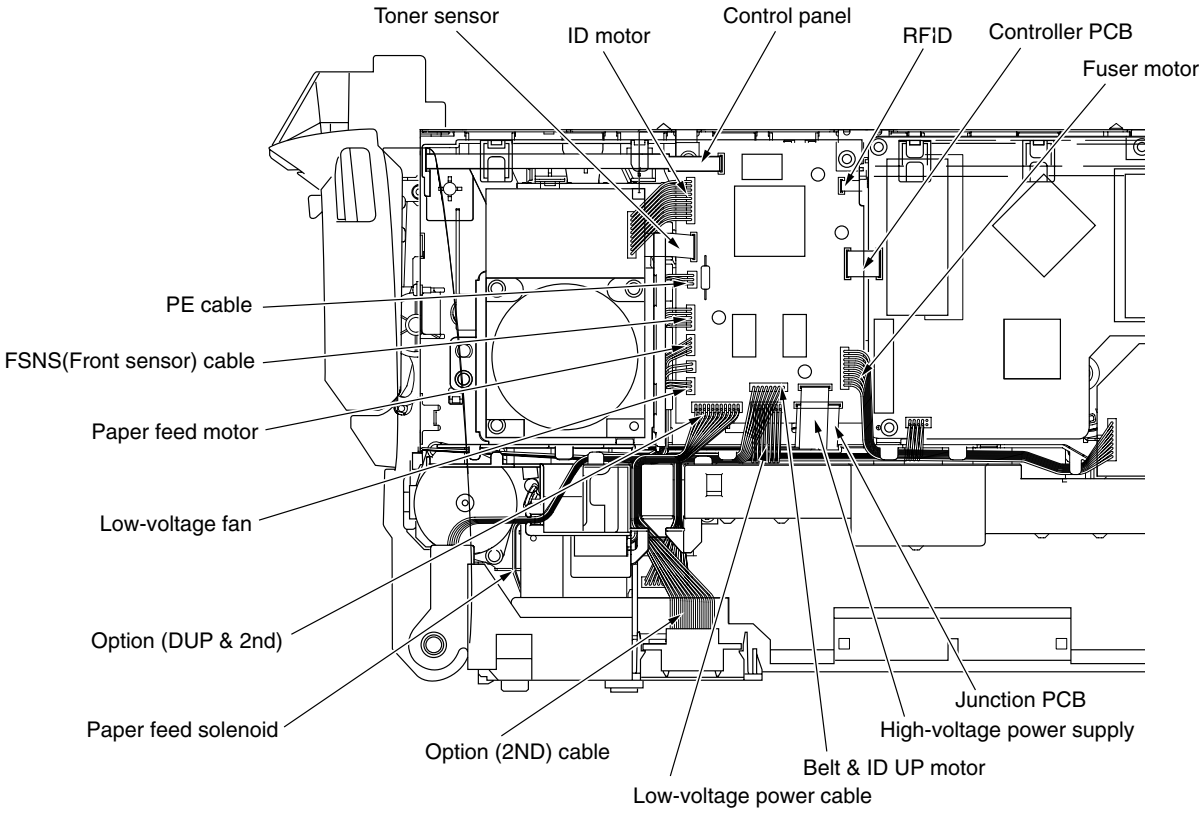

Figure 4-2-7-2. Cable route diagram of print engine controller PCB

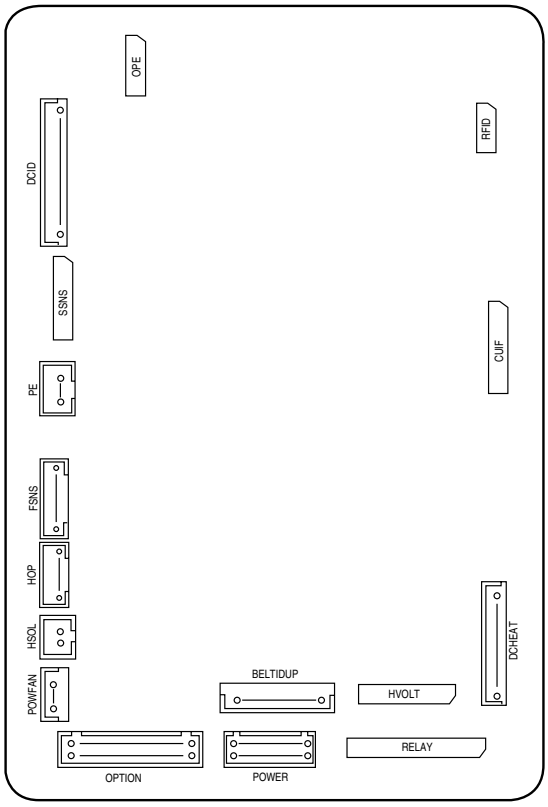

Figure 4-2-7-3 Connection diagram of print engine controller PCB

4.2.8 Top cover assembly

(1) Detach the left side cover. (See Subsection 4.2.1.)

(2) Detach the right side cover. (See Subsection 4.2.2.)

(3) Detach the rear cover. (See Subsection 4.2.4.)

(4) Remove the plate assembly shield (GDI), and then, the control PCB. (See Subsection 4.2.6.)

(5) After unplugging the connector, disconnect hooked RFID cable ①.

(6) Remove two E-shaped retaining rings ② and two spring torsions ③, and detach top cover Assy ①.

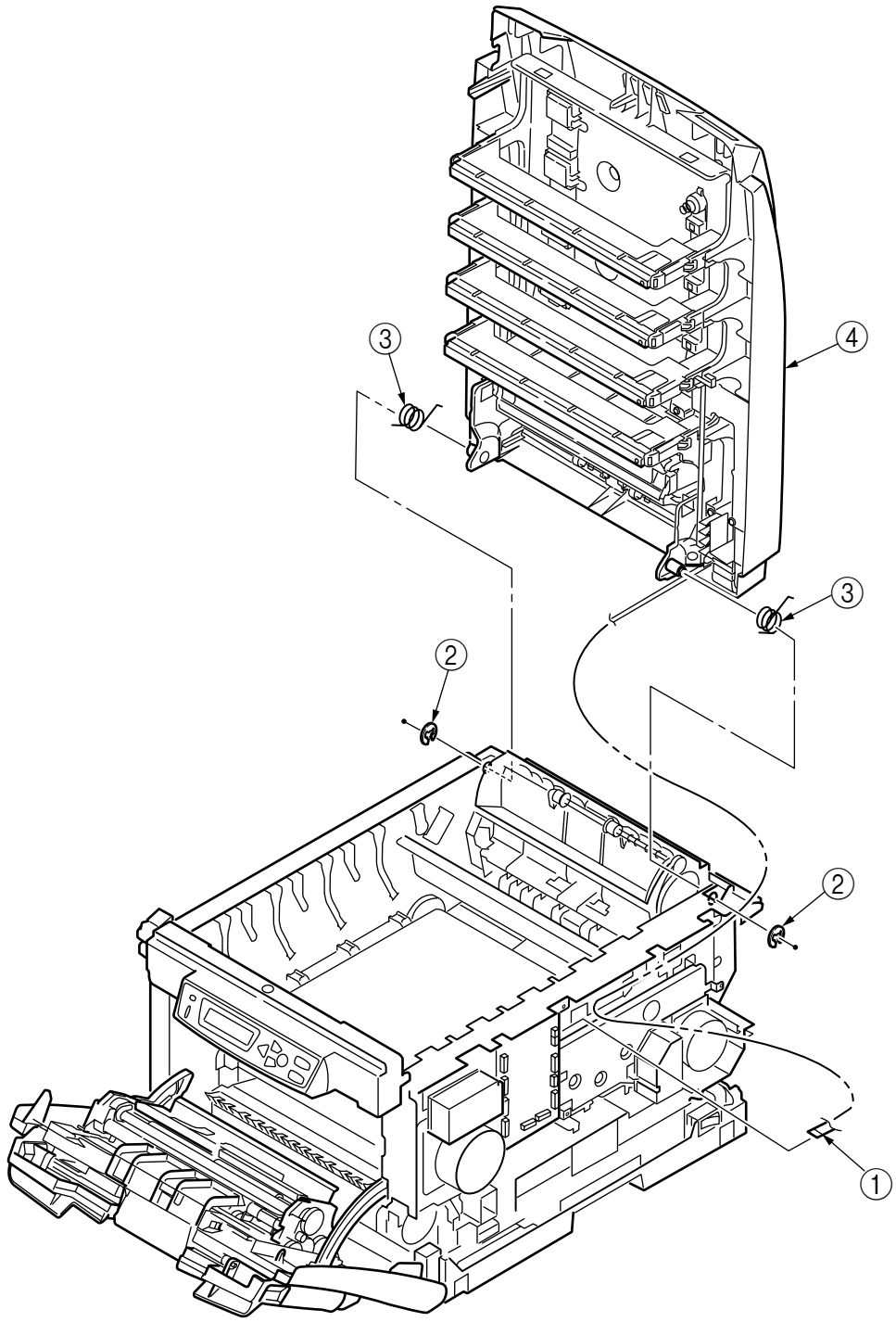

Figure 4-2-8 Top Cover Assy

4.2.9 Top cover

(1) Detach the top cover assembly. (See Subsection 4.2.8.)

(2) Remove ten screws (black) ①, and detach cable cover ② and top cover ③.

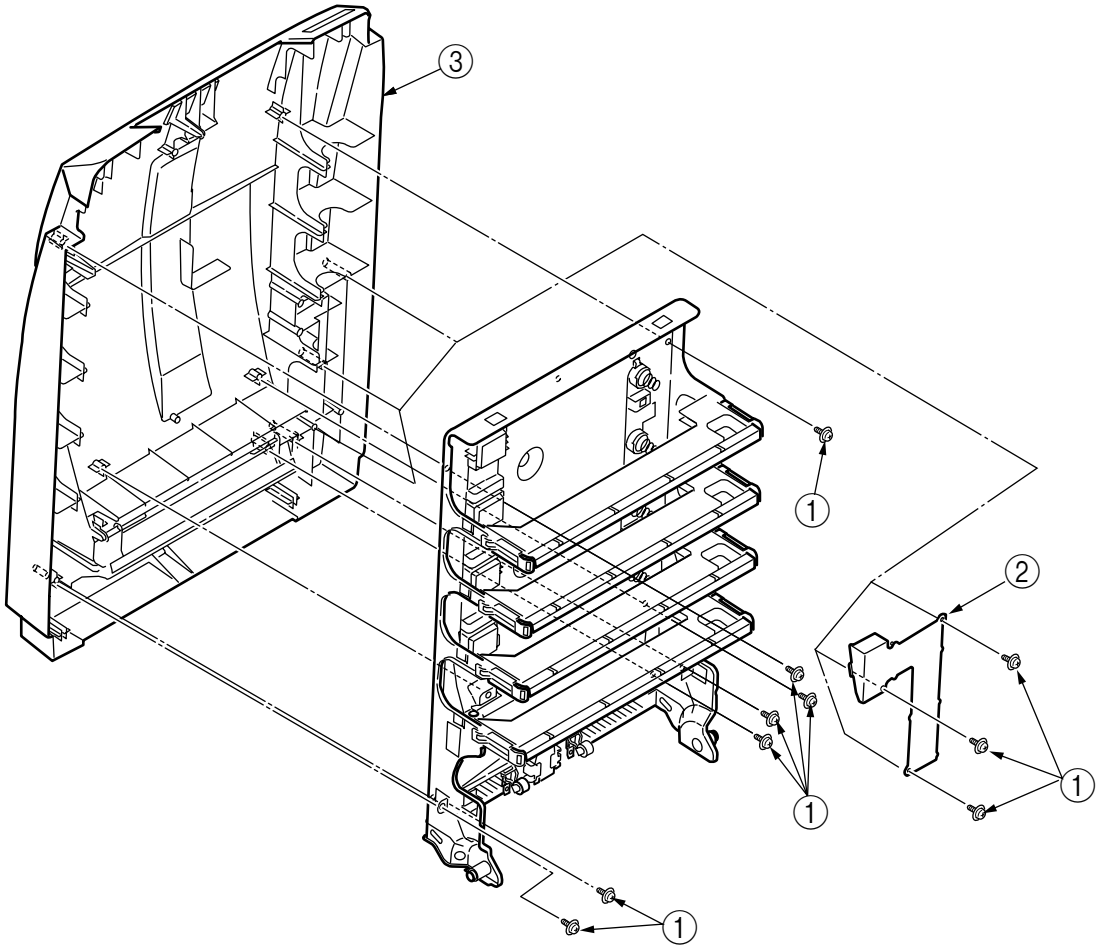

Figure 4-2-9 Top cover

4.2.10 Controller Panel Assy

1) Open the top cover.
(2) Open the feeder unit.
(3) Detach the right side cover. (See Subsection 4.2.3.)
(4) Remove the plate shield assembly. [See Subsection 4.2.7 (2).]
(5) After unplugging the connector of the control panel assembly, free the hook.
(6) Remove four screws (silver) ①, and detach control panel Assy ②.

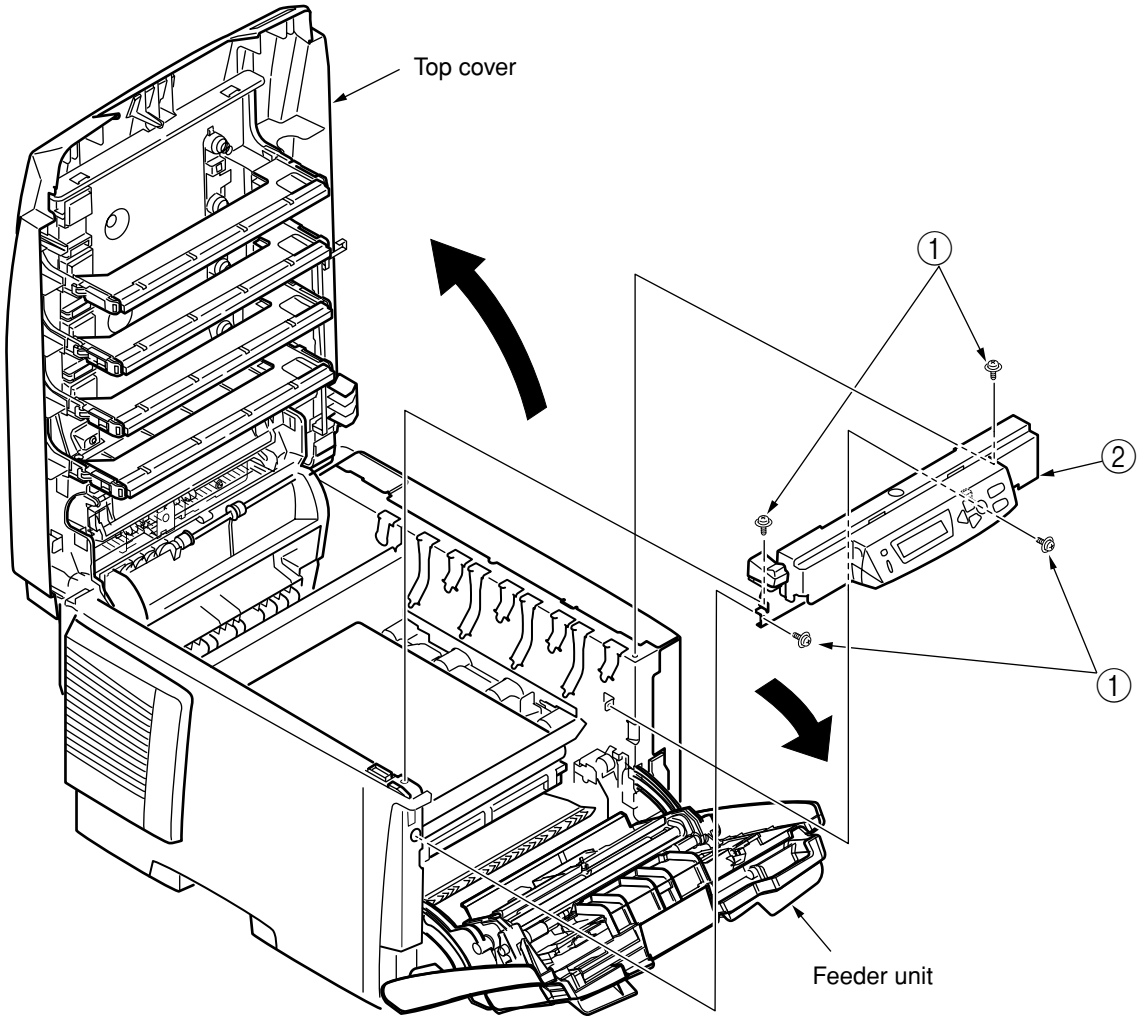

Figure 4-2-10 Control Panel Assy

4.2.11 Operator panel PCB/ Top Cover Handle

(1) Detach the control panel assembly. (See Subsection 4.2.10.)

(2) Release two claws A, as illustrated in Figure (2), and remove frame OP1, lever lock ② and spring compression ③.

(3) Release two claws B by forcing in the flat-tipped screwdriver, and remove the cover assembly OP④ and spring torsion ⑤.

(4) Release two claws C of the cover assembly OP ④, as shown in Figure (3), and remove Operator panel PCB ⑥ and cable ⑦.

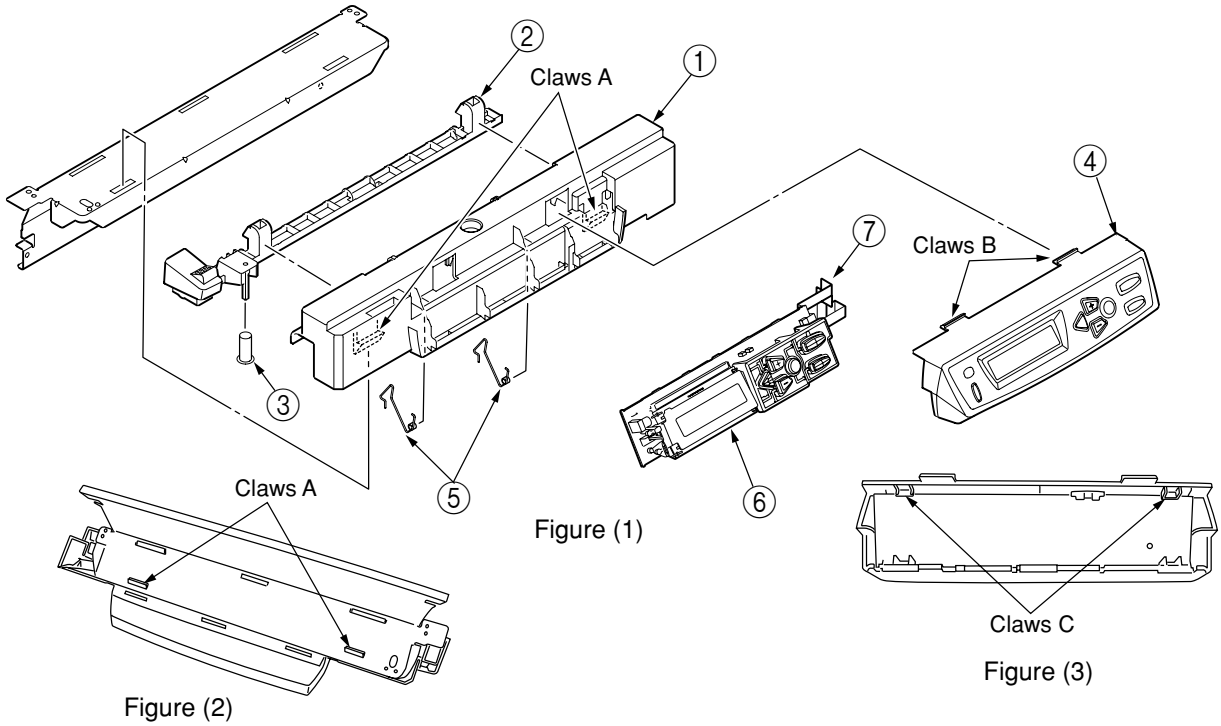

Figure (1)

Figure (2)

Figure (3)

Figure 4-2-11 Operator panel PCB/ Top Cover Handle

4.2.12 Low-Voltage Power Supply / Low-Voltage Fan / Hopping Motor / Fuser Motor

⚠Warning	Risk of Electric Shock	

There is a risk of electric shock during replacement of the low voltage power supply.

Use insulating gloves or avoid direct contact with any conducting part of the power supply, and caution should be exercised during replacement.

The capacitor may take one minute to complete discharge after the AC cord is unplugged. Also, there is a possibility that the capacitor doesn't discharge because of a breakage of the PCB, etc., so remember the possibility of electric shock to avoid electric shock.

(1) Remove the cassette assembly.

(2) Disassemble the print engine controller PCB. (See Subsection 4.2.7.)

(3) Disassemble the CU PCB. (See Subsection 4.2.6.)

(4) Disconnect all the cables from the Guide Cable PowerLow.

(5) Unplug the fuser I/F connector from the low-voltage power supply, and remove Guide Cable PowerLow ① by releasing the two claws.

(6) Remove two screws (silver) ② and four connectors (CN1, CN2, CN3), and disassemble low-voltage power supply ③. At the same time, remove screw ④ to disassemble AC inlet Assy ⑤.

(7) Release claw C, and remove low-voltage fan ⑥.

(8) Detach motor cover ⑦ by releasing two claws D and claw E.

(9) Remove two screws (silver) ⑧, unplug the connector, and disassemble hopping motor ⑨.

(10) Remove four screws (silver) ⑩, unplug the connector, and disassembleFuser Motor ⑪.

(11) Remove three screws (silver) ⑫, unplug the connector, and disassemble ID motor ⑬.

Note! • When reassembling low-voltage fan ⑥, confirm the direction.

• When reassembling low-voltage power supply ③, check the setting of the AC input voltage.

120-V system: Install a short-circuit plug to connector CN6.
230-V system: Do not install a short-circuit plug to connector CN6.

• Replace low-voltage power supply ③ and AC inlet assembly ⑤ together in a pair. (Parts approved in a pair under Safety Standard) (they were in a pair qualified to applicable safety standards).

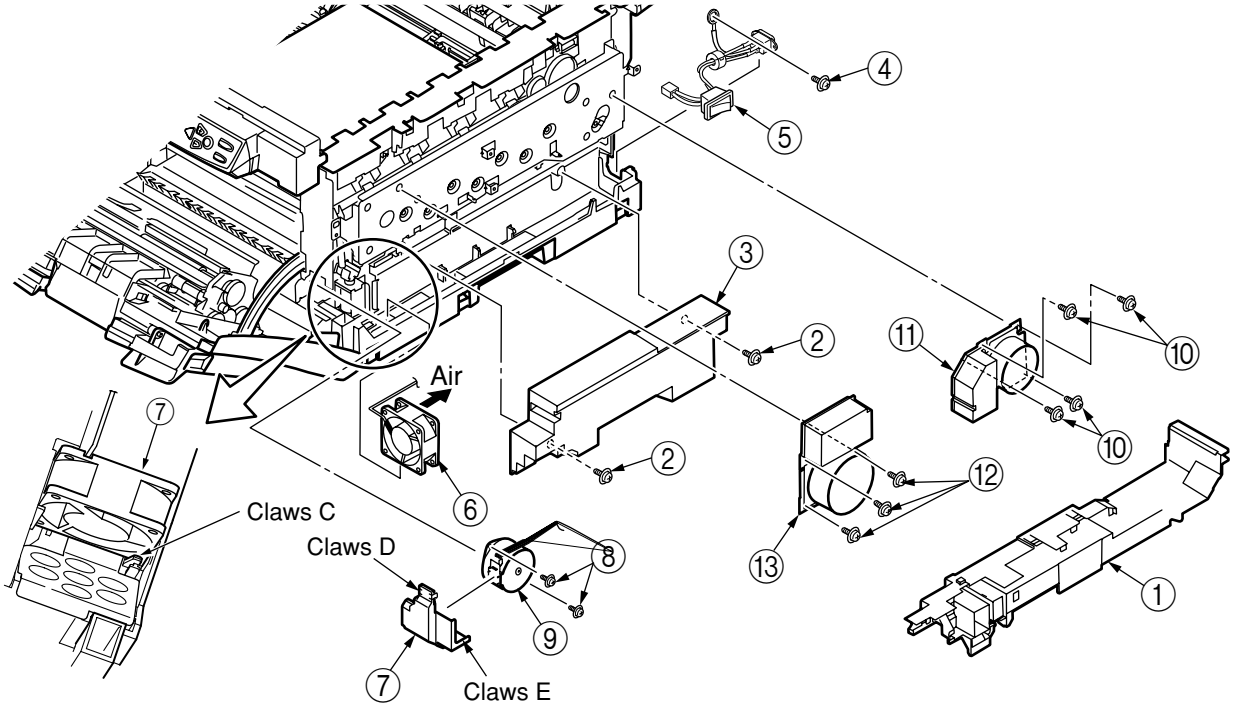

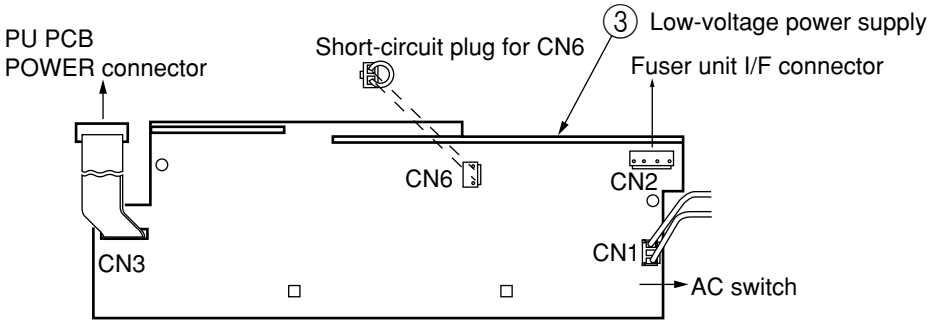

Notes!
CN6: Switching connector for AC input voltage setting
Short-circuit plug to be equipped for 100-V system/Short-circuit plug not to be equipped for 230-V system

Figure 4-2-12 Low-Voltage Power Supply / Low-Voltage Fan / Hopping Motor / Fuser Motor

4.2.13 Guide Eject Assy / Color Register Assy / Junction PCB

(1) Detach the left side cover, right side cover, rear cover, and top cover assembly. (See Subsections 4.2.1, 4.2.2, 4.2.4, and 4.2.8.)

(2) Remove the print engine controller PCB, control PCB, and low-voltage power supply. (See Subsections 4.2.6, 4.2.7, and 4.2.12 (3).)

(3) Unplug the connector of the belt thermistor, remove two spring torsions ①, and disassemble cover driver ② by freeing the four claws with the flat-tipped screwdriver.

(4) Remove screws (silver) ③, and unplug the six connectors to disassemble Junction PCB ④.

(5) Remove two screws (silver) ⑤, and disassemble color register Assy ⑥.

(6) Remove two screws (silver) ⑦, and free cable ⑧ of the fuser I/F connector from the clamp. Then, release the claw of guide cable ⑨ by sliding it, and remove guide eject Assy ⑩.

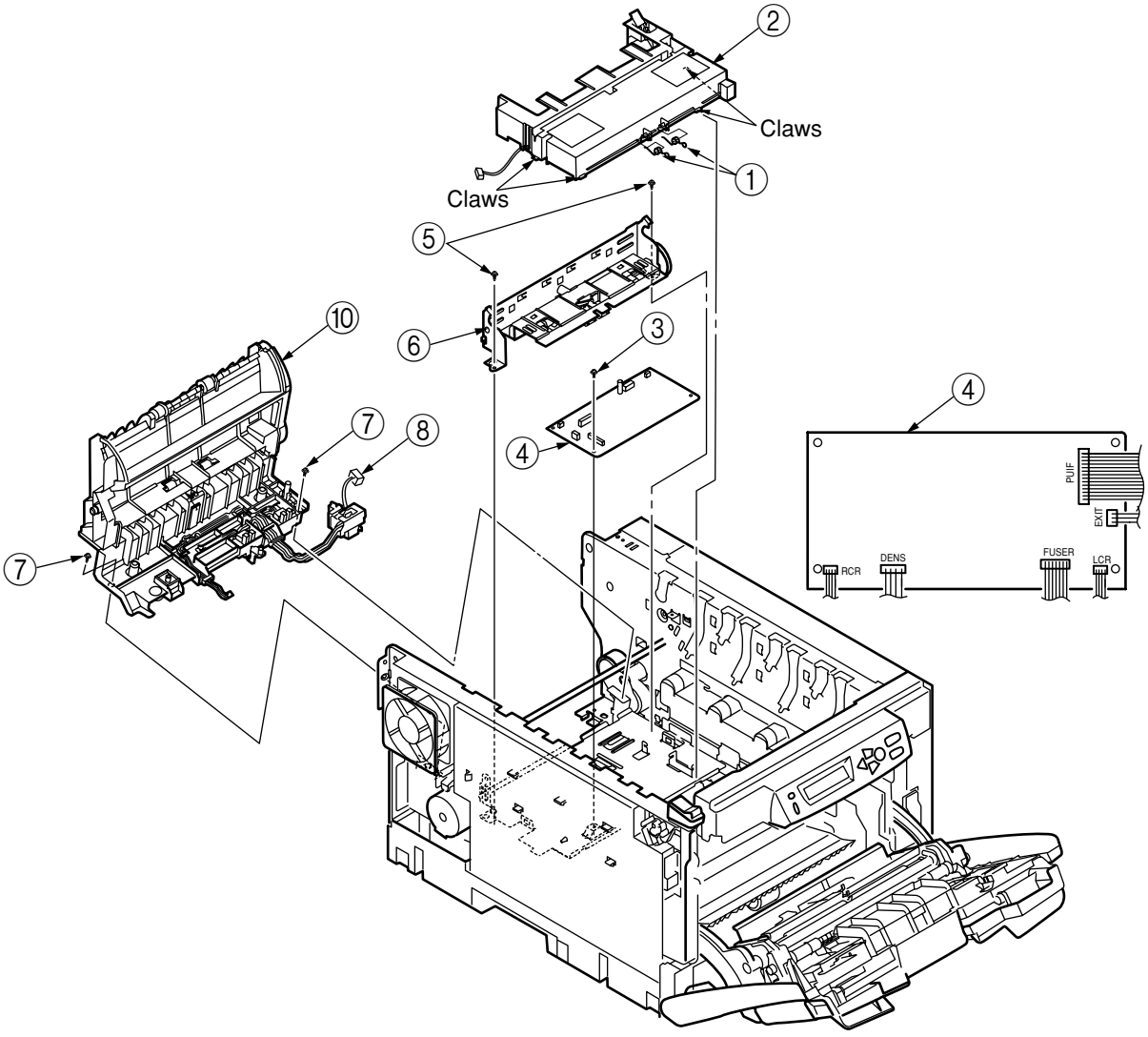

Figure 4-2-13-1 Guide Eject Assy / Color Register Assy / Junction PCB

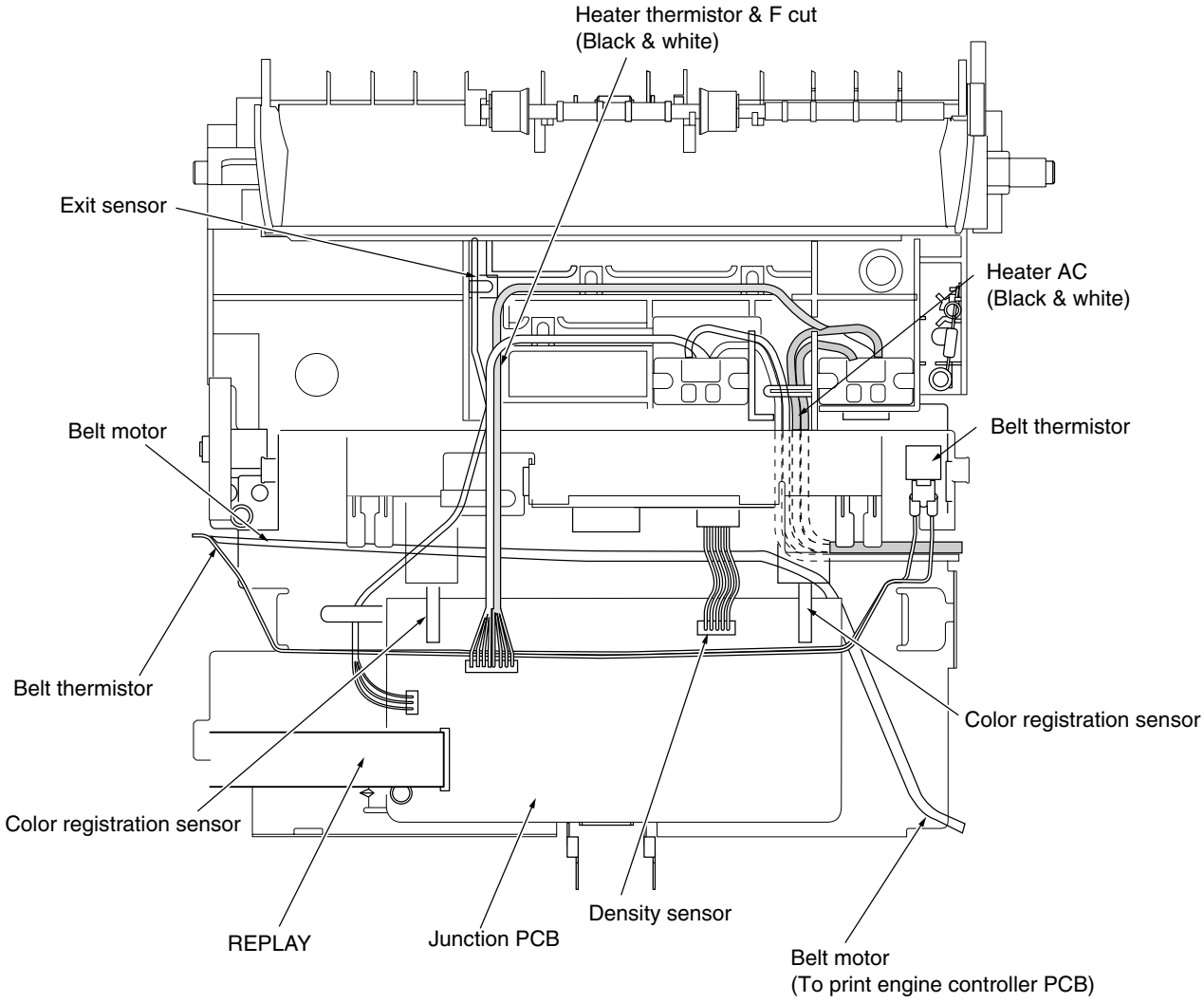

Figure 4-2-13-2 Junction PCB Cable Route Diagram

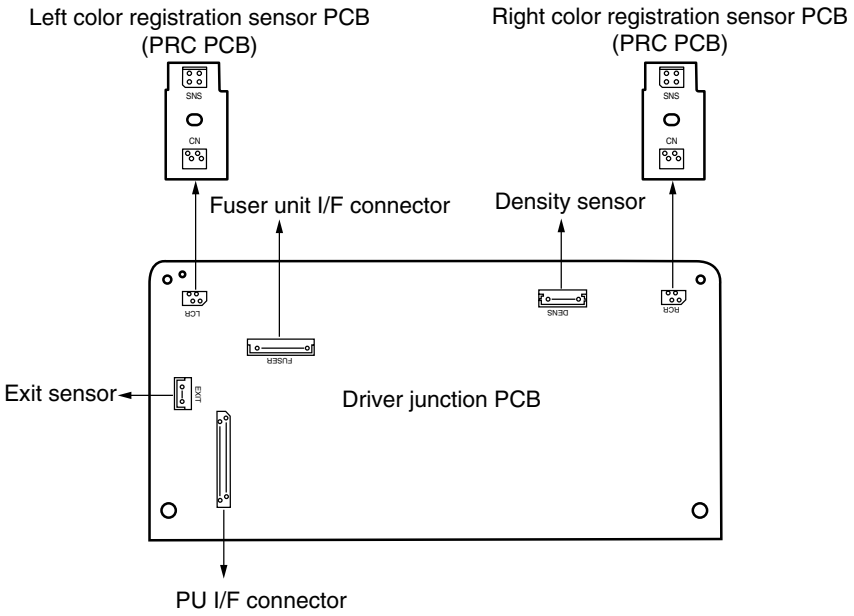

Figure 4-2-13-3 Junction PCB Connection Diagram

4.2.14 Fan (Fuser)/ Belt Motor / High-Voltage Power Supply Board / Cover-Open Switch

(1) Detach the left side cover. (See Subsection 4.2.1.)

(2) Remove screw (silver) ①, unplug the connector, and disassemble belt motor ②.

(3) Detach rear cover ③. (See Subsection 4.2.4.)

(4) Unplug the connector, and remove Fan (Fuser) ④ by turning it clockwise.

(5) Free the connector and two claws ⑪, and remove cover-open switch ⑤.

(6) Remove screws (silver) ⑥ and seven claws ⑫, unplug the two connectors, and disassemble high-voltage power supply ⑦.

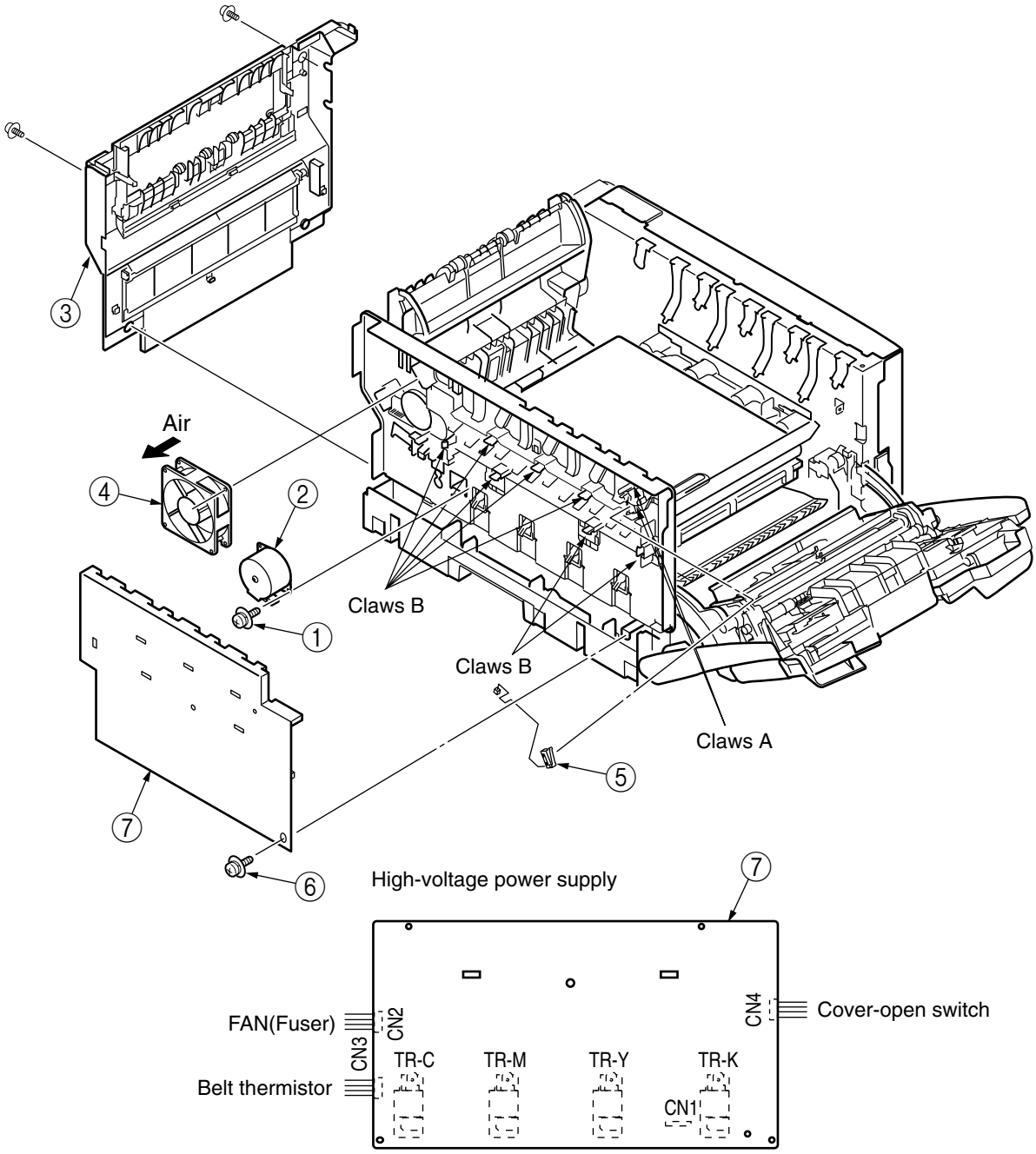

Figure 4-2-14 Fan (Fuser)/ Belt Motor/high - Voltage Power Supply Board / Cover-Open Switch

4.2.15 MPT Assy

(1) Open MPT Assy ①.

(2) Release the two stoppers by opening the two arms of MPT Assy ① toward the outside, pull the assembly in the direction of the arrow to free the two fulcrums, and detach MPT Assy ①.

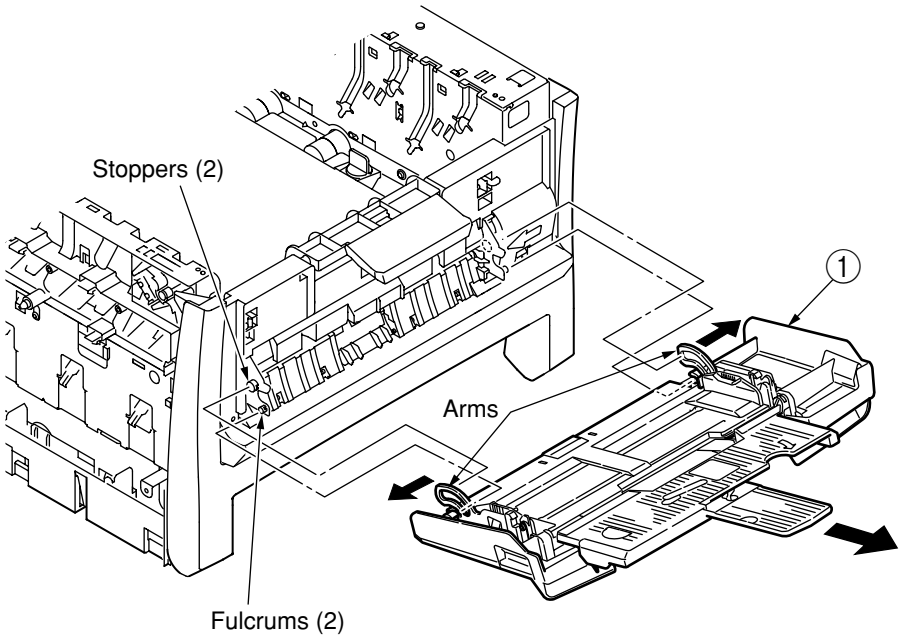

Figure 4-2-15 MPT-Assy

4.2.16 Feeder Unit / Front sensor PCB/ MPT Hopping Roller / Frame Assy Separator / Cover Front

(1) Open the top cover.

(2) Remove the plate shield, and unplug the connector. (See Subsection 4.2.6.)

(3) Free the claws of Stay L ① and Stay R ②, and remove feeder unit ③ by sliding it to the right.

(4) Detach the motor cover. (See Subsection 4.2.12.)

(5) Disassemble cover sensor ④ by freeing the claw.

(6) Unplug the connector, and disassemble Front sensor PCB ⑤.

(7) Remove MPT Assy. (See Subsection 4.2.15.)

(8) Detach lever ⑥ by turning it until its claw is freed.

(9) Remove two screws (black) ⑦, and detach stay L ①.

(10) Remove four screws (black) ⑧, free two claws ⑫ on the front side, and disassemble feed Assy ⑨.

(11) Detach two lock shafts ⑩ and two springs ⑪, and disassemble guide Assy ⑫ by freeing the four claws.

(12) Remove hopping roller shaft ⑬.

(13) Free the two fulcrums, and remove frame assembly separator ⑭ and spring ⑮.

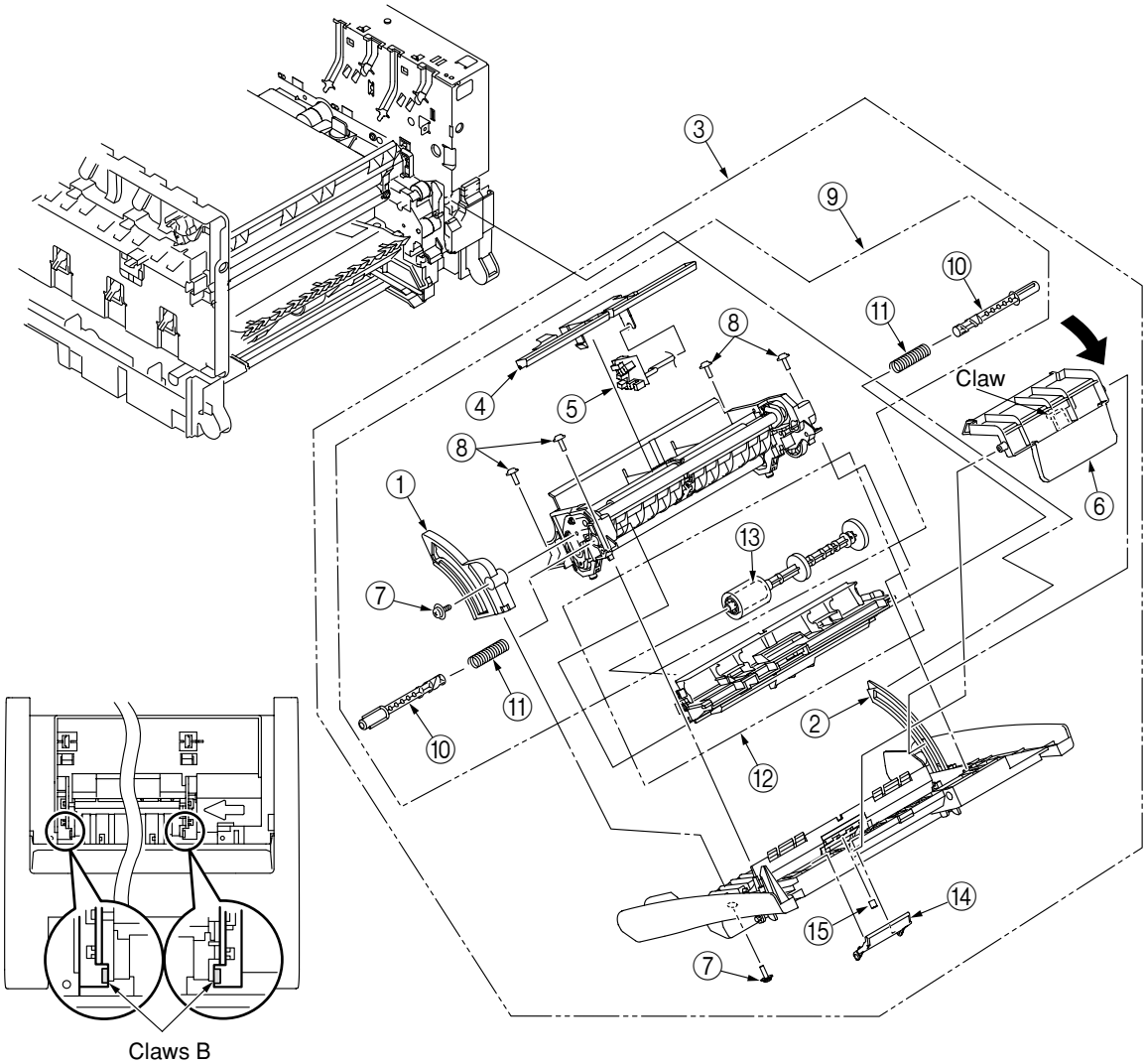

Figure 4-2-16 Feeder Unit / Front sensor PCB/ MPT Hopping Roller / Frame Assy Separator / Cover Front

4.2.17 Toner sensor PCB Lift-Up Motor/Solenoid/Paper-End Sensor

(1) Detach the left side cover, right side cover, rear cover, top cover unit, and feeder unit. (See Subsections 4.2.1, 4.2.2, 4.2.4, 4.2.8 and 4.2.16.)
(2) Disassemble the print engine controller PCB and CU PCB. (See Subsection 4.2.6, 4.2.7 and 4.2.12 (3).)
(3) Remove the guide cable Power Low, low-voltage power supply, and low-voltage fan. (See Subsection 4.2.12.)
(4) Remove the cover driver, Junction PCB, color register Assy, and eject assembly. (See Subsection 4.2.13.)
(5) Remove two screws (silver) ① and plate driver ②.
(6) Release the latch, and disassemble cover hopping ③ after unplugging the connector of the 2nd tray.
(7) Detach the Fan (Fuser). (See Subsection 4.2.15.)
(8) Remove gear ④ by releasing the two latches, and remove gear ⑤ by releasing the latch. Then, remove shaft ⑦ by releasing the latch of gear ⑥.
(9) Remove two screws (silver) ⑧, and disassemble side plate R Assy ⑨.
(10) Remove ten screws (silver) ⑩ and plate outer ⑪, and detach four gears idle ID ⑫, gear ⑬, three color ⑭, gear ⑥, ⑮, ⑯, ⑰, ⑱, and spring ⑲ of the solenoid.
(11) Release the two latches, and remove guide Assy side R ⑳ by sliding it upward.
(12) Remove screw (silver) ㉑, remove plate lockout ID ㉒ and four screws ㉓, and detach plate inner ㉔.
(13) Remove two screws (silver) ⑩, unplug the connector, and disassemble lift-up motor ㉖.
(14) Remove screw (silver) ㉗, and detach solenoid ㉘.
(15)Disassemble hopping motor (See Subsection 4.2.12) and two screws (black) ㉚, and detach gear Assy HP㉛.
(16) Remove spring ㉜, free the claw, and remove bush ㉝, hopping roller shaft ㉞ and frame hopping ㉟.
(17) Disassemble paper-end sensor ㊱ and paper-end lever ㊲.

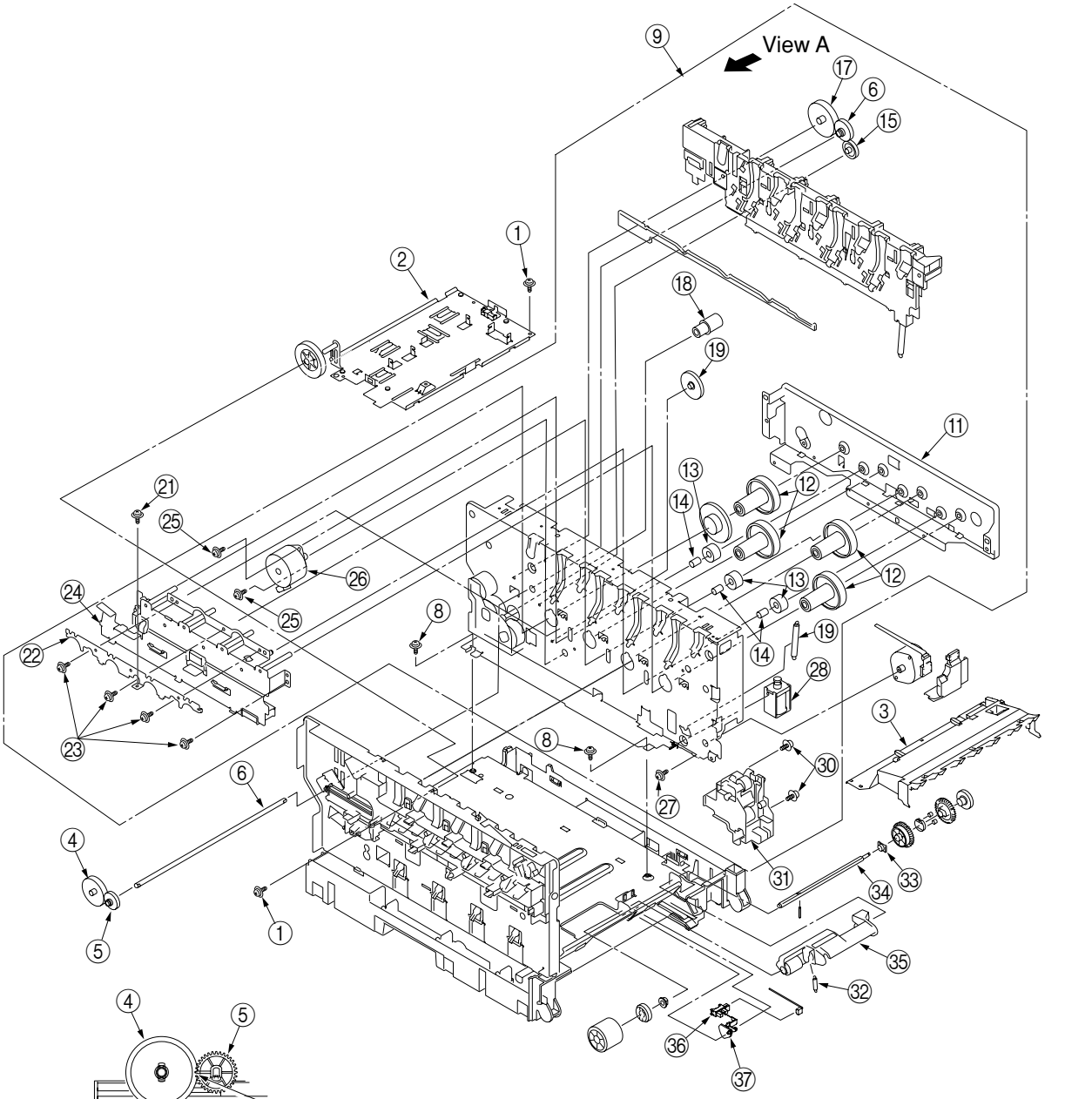

Figure 4-2-17 Toner sensor PCB Lift-Up Motor/Solenoid/Paper-End Sensor

4.2.18 Feed Roller

(1) Remove the cassette.

(2) Release the latch, and remove feed roller ①.

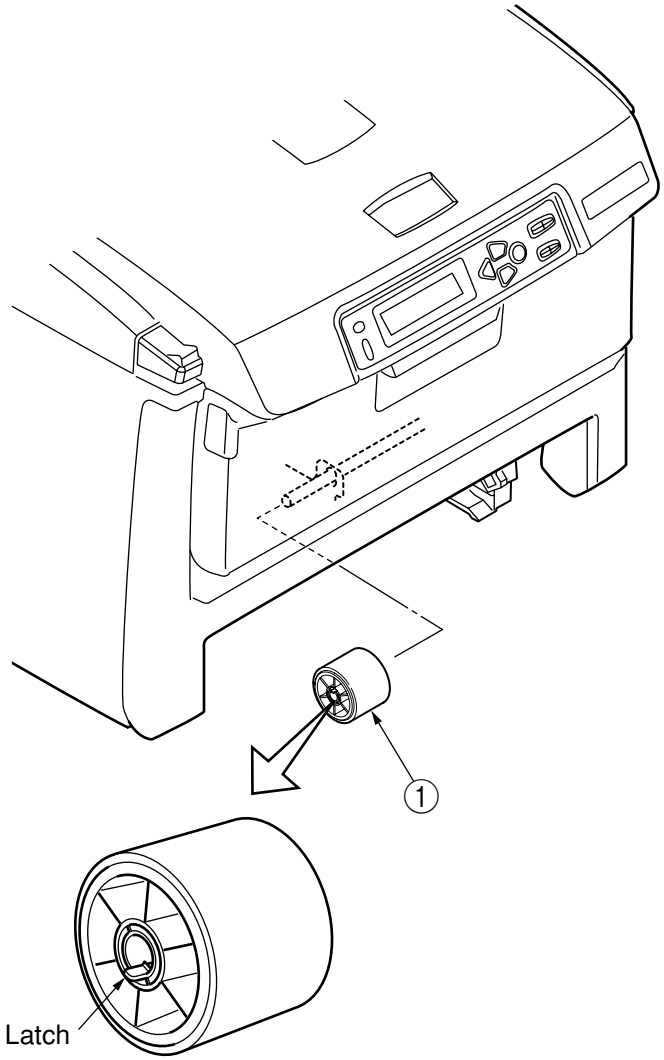

Figure 4-2-18 Feed Roller

4.2.19 Shaft Eject Assy(FU) / Shaft Eject Assy(FD) / Eject Sensor

(1) Remove the eject Assy. (See Subsection 4.2.13.)

(2) Free the two claws, and divide the Assy between guide into lower ① and guide eject upper ②.

(3) Remove gear idle eject ③, and disassemble shaft Assy eject (FU) ④ and shaft Assy eject (FD) ⑤ and Gear eject ⑥.

(4) Remove lever eject sensor ⑦ and eject sensor ⑧.

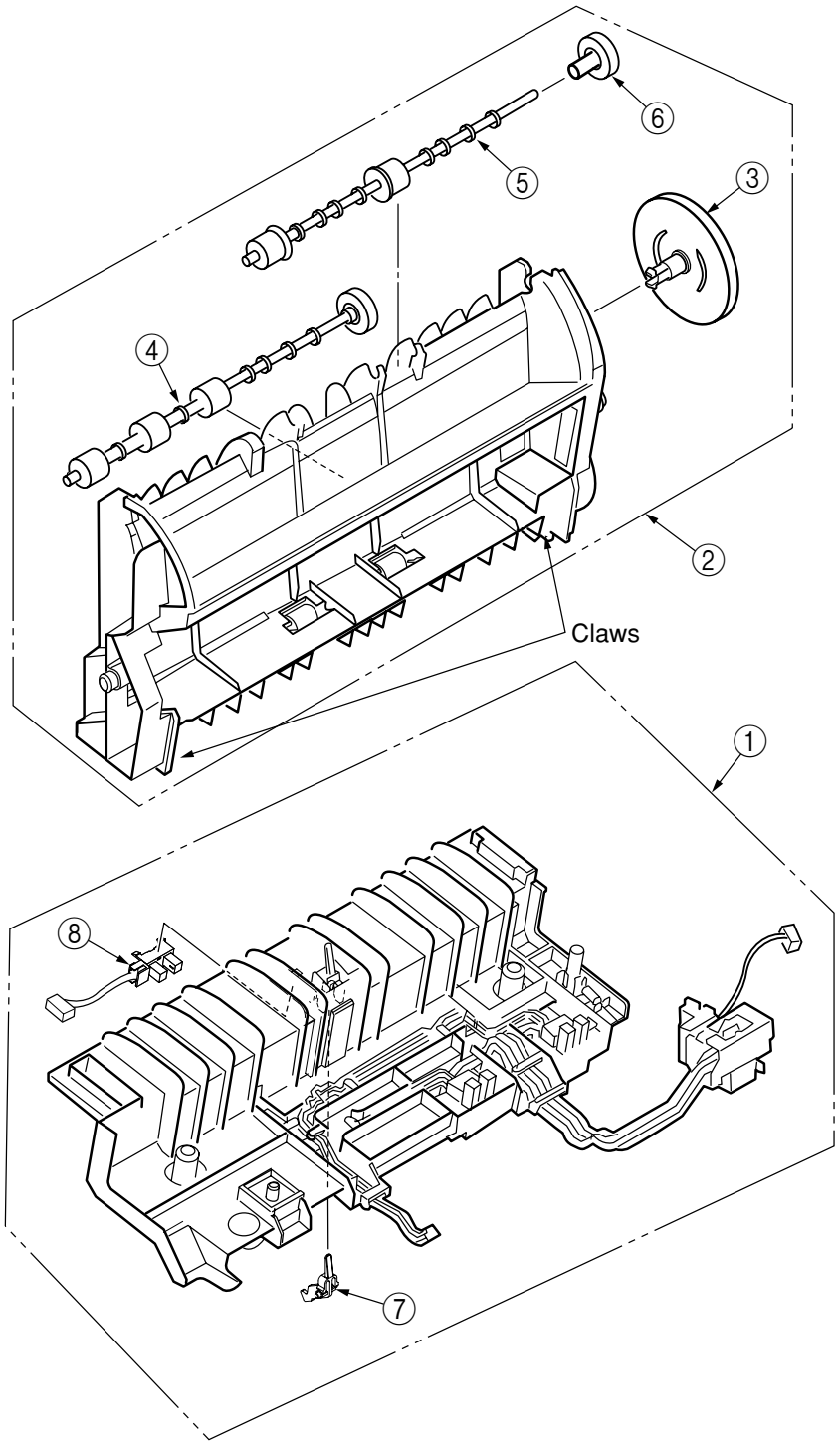

Figure 4.2.19 Shaft Eject Assy(FU) / Shaft Eject Assy(FD) / Eject Sensor

4.2.20 Fuser Unit

(1) Open the top cover.

(2) Lift up the lock levers ① (2, blue) of the fuser unit in the direction of the arrow, and remove fuser unit ②.

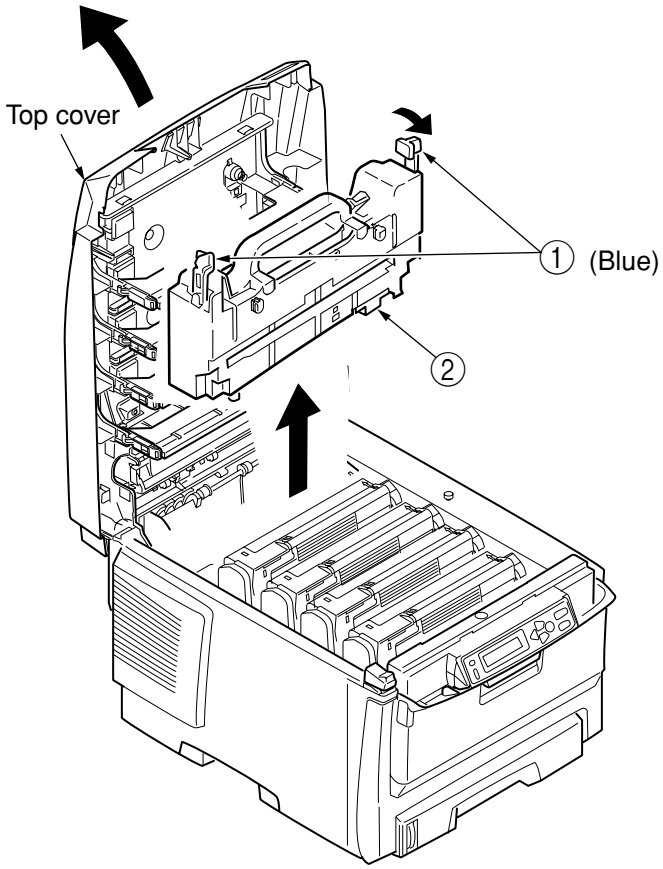

Figure4-2-20 Fuser Unit

4.2.21 Belt Unit

(1) Open the top cover.
(2) Remove ID unit ①.
(3) Turn the lock levers (2, blue) of belt unit ② in the direction of the arrow , and hold belt unit ② by the levers (Blue) to remove it.

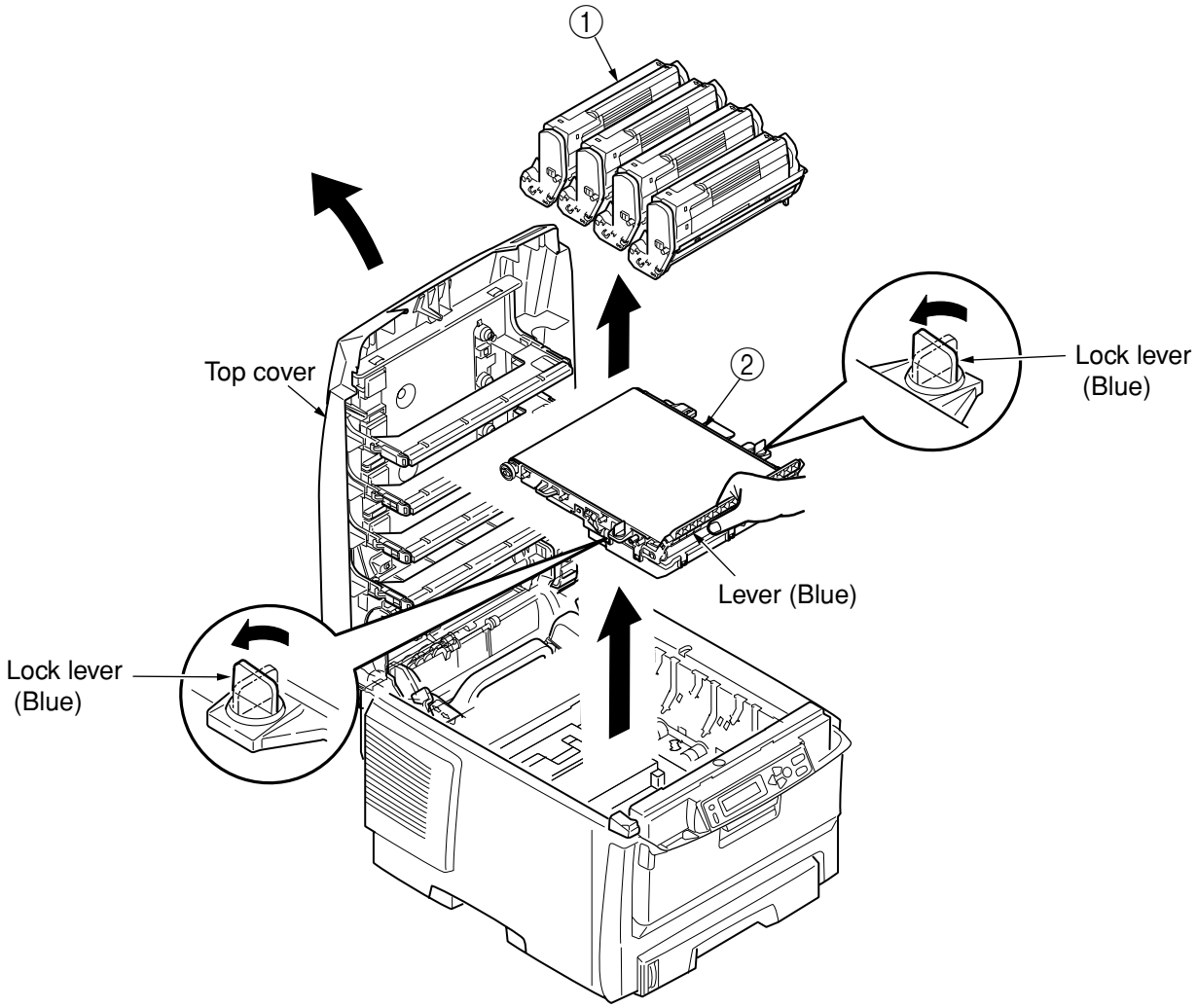

Figure 4-2-21 Belt Unit

4.3 Lubricating points

This subsection indicates the lubricating points of the printer. Conversely, it means that any other parts than the specified lubricating points must not be lubricated.
There is no need to lubricate in the midst of a disassembling job. However, if lubricating oil has been wiped off, supply the specified oil.

Lubricating work

(1) Symbols and names of oils
EM-30L: MOLYKOTE EM-30L
HP-300: MOLYKOTE HP-300
PM : Pan Motor Oil 10W-40 or ZOA 10W-30

(2) Boundary samples of grease

Class	S	A	B	C	D	E	F
Amount of grease(cc)	0.0005	0.003	0.005	0.01	0.03	0.05	0.1
W(mm)	1.24	2.25	2.67	3.37	4.86	5.76	7.26
Sample	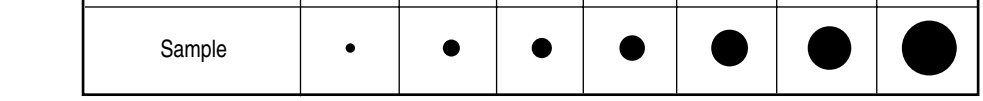						

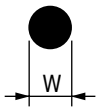

① 43070301 Plate-Assy.-Base

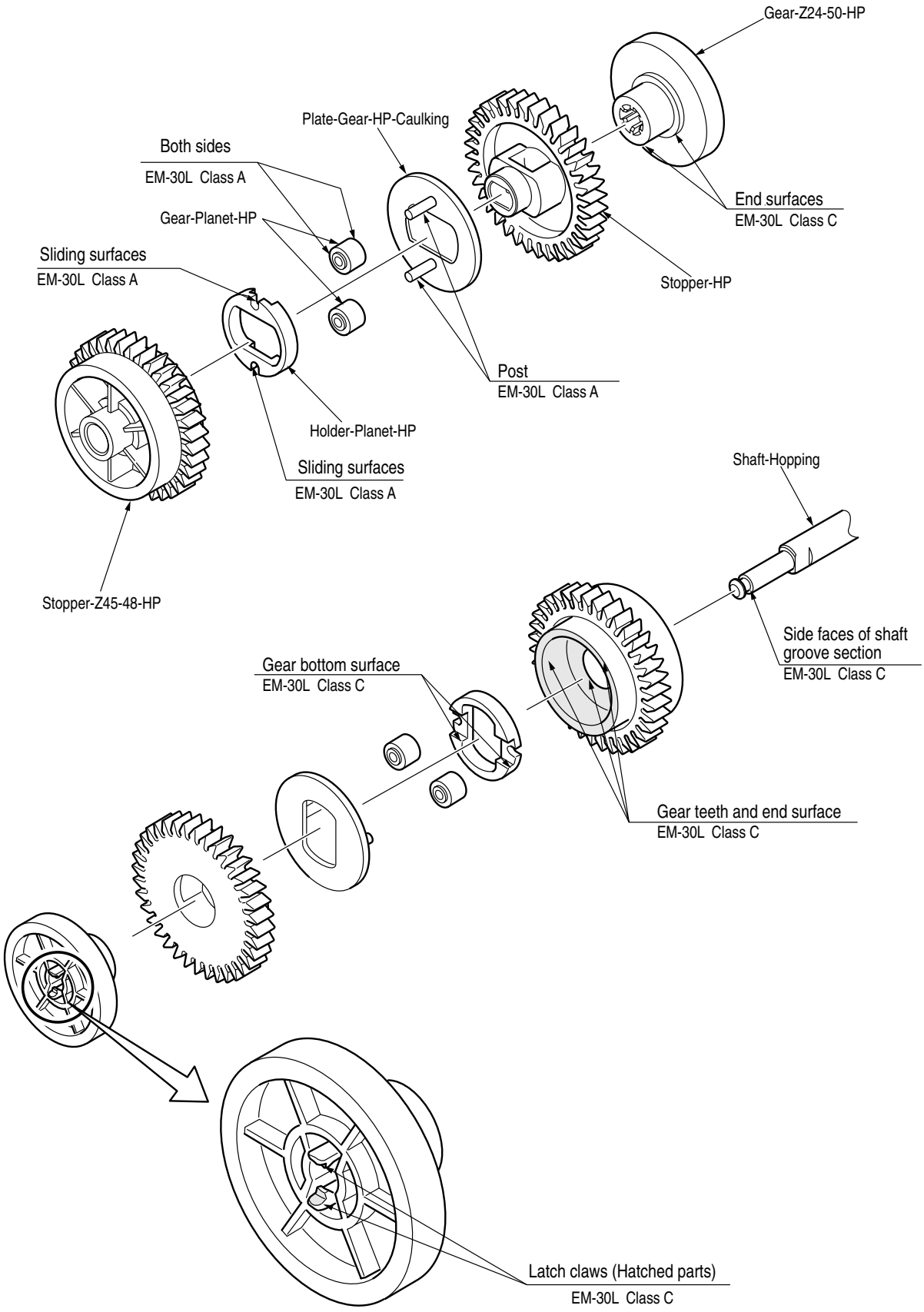

② 42049701 Guide-Assy.-Cassette-L

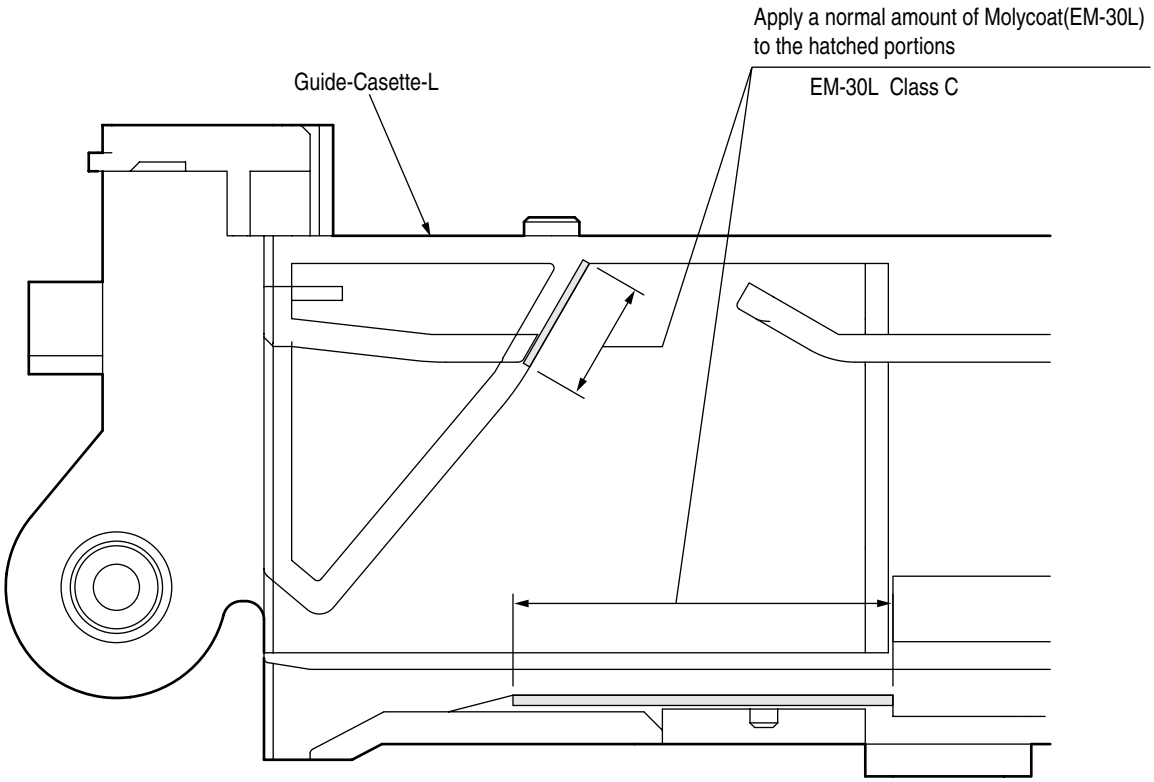

③ 43294901 Guide-Assy.-Cassette-R

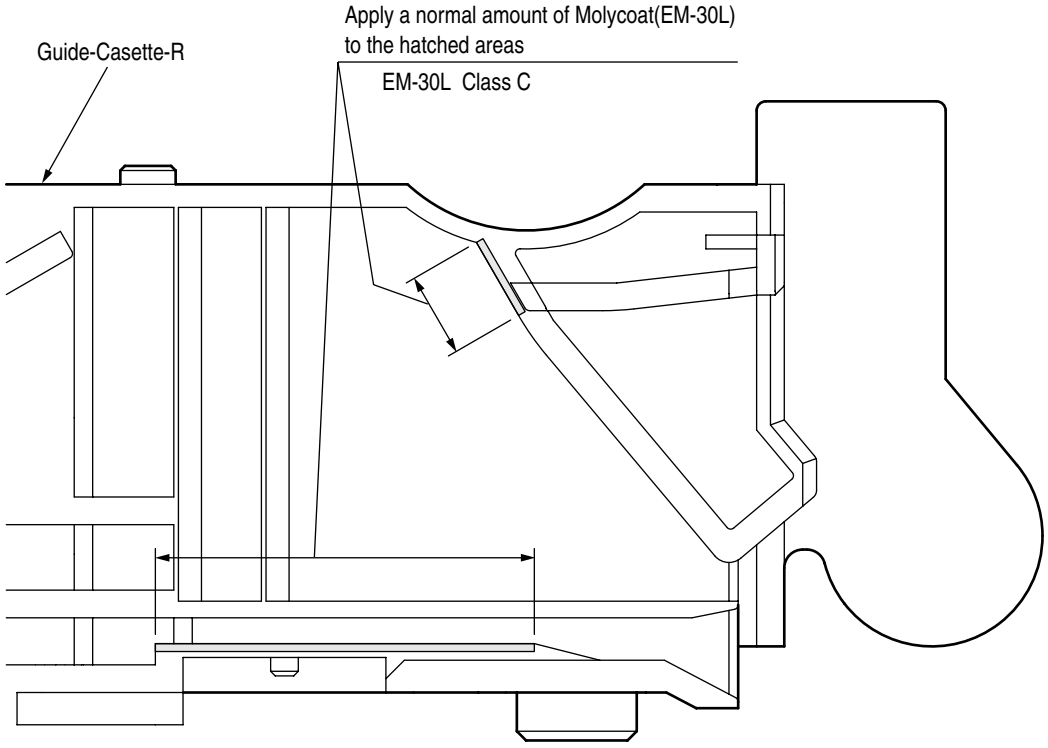

④ 43073201 Gear-Assy.-HP

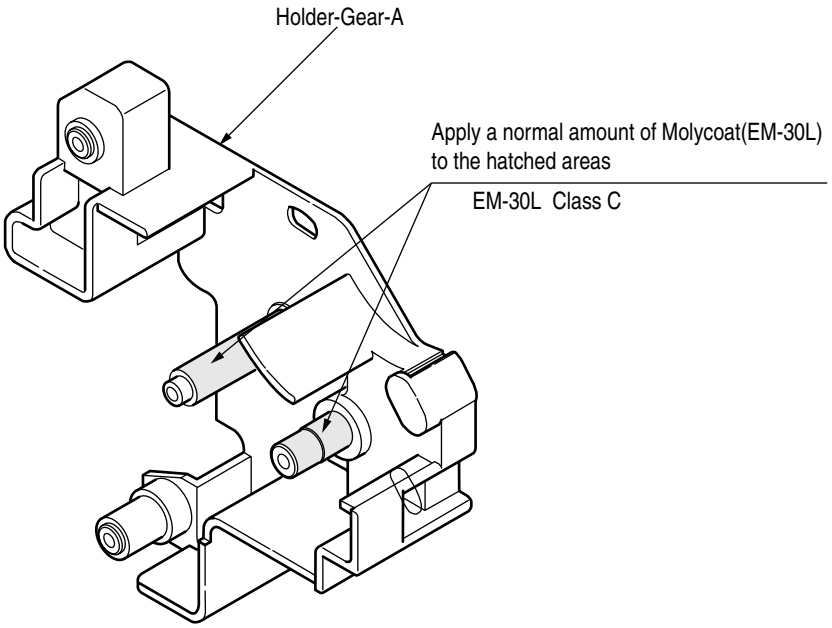

⑤ 43072101 Gear-Planet-Assy

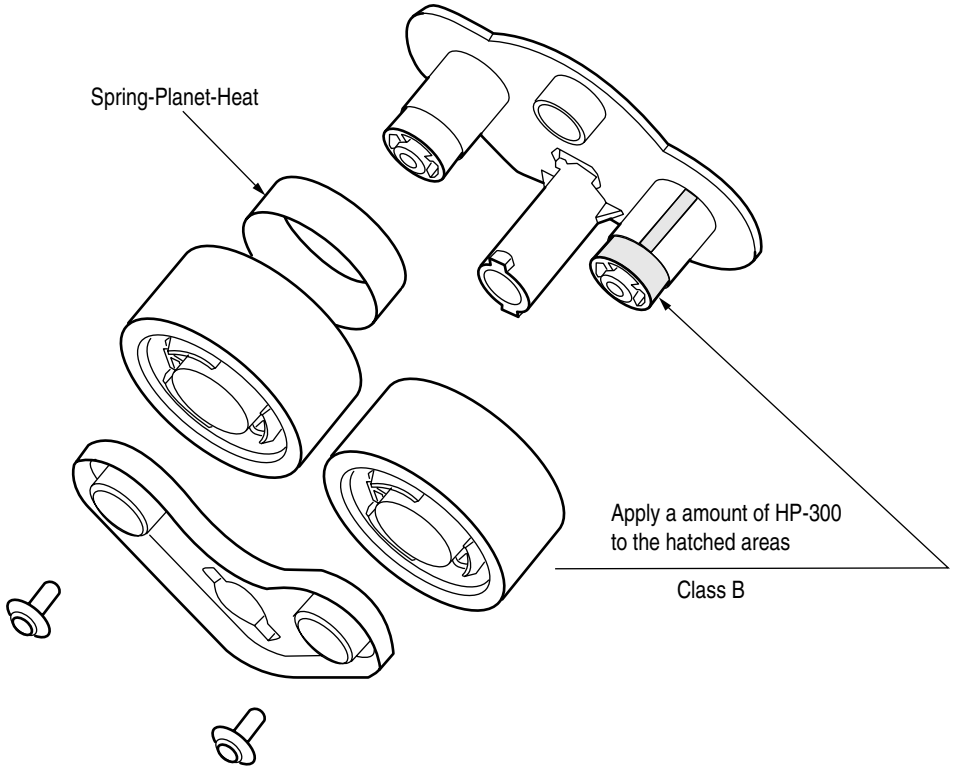

⑥-1 43070501 Plate-Ass.-Side-R

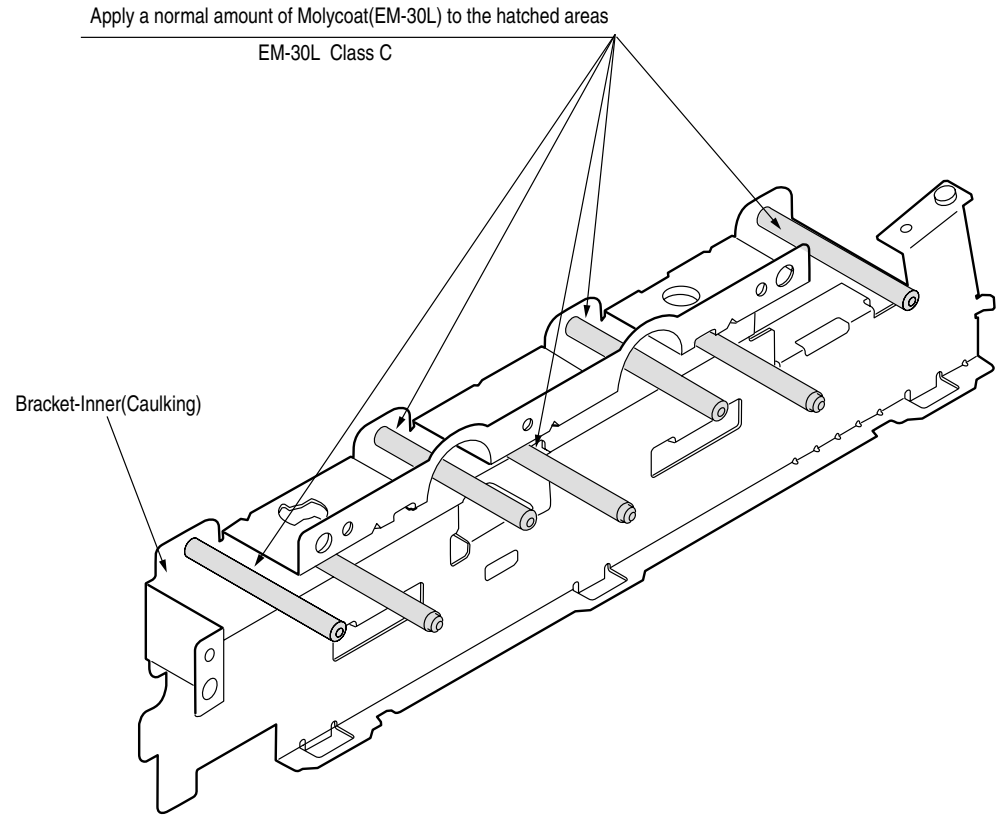

⑥-2 43070501 Plate-Ass.-Side-R

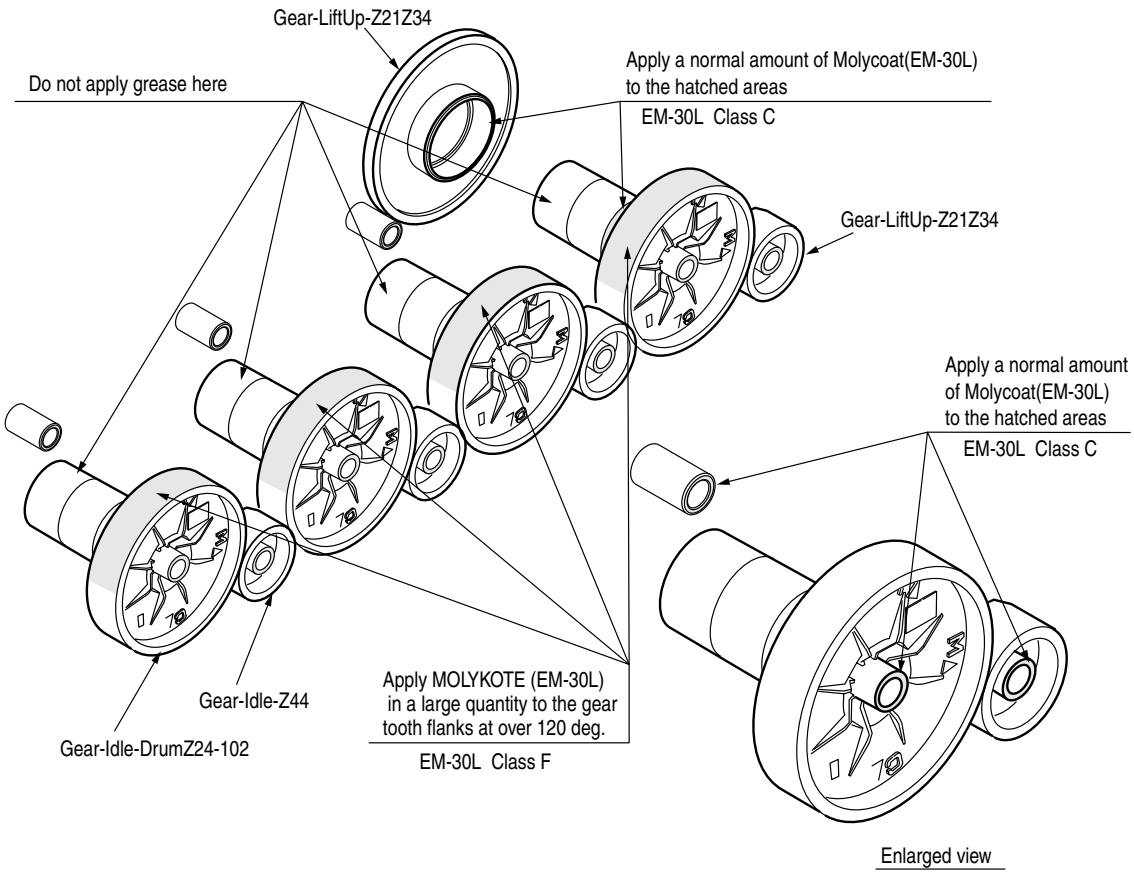

⑥-3 43070501 Plate-Ass.-Side-R

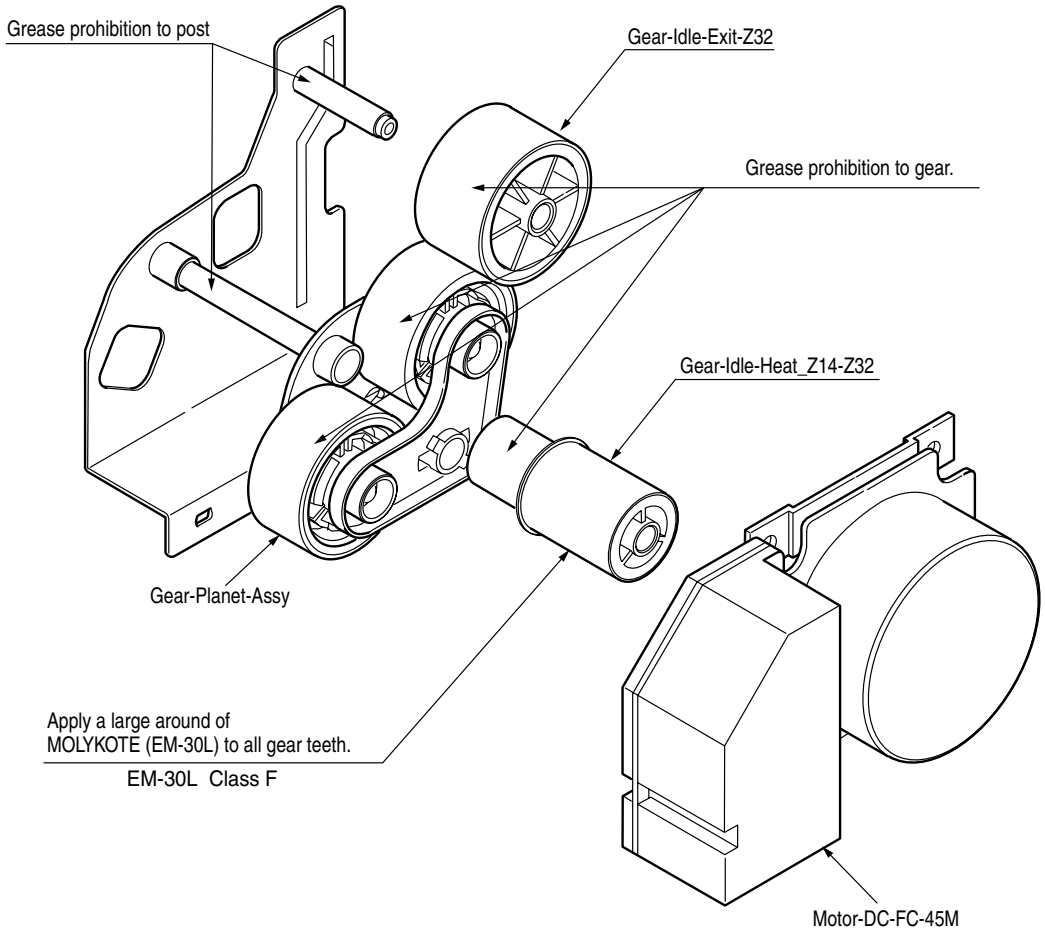

⑥-4 43070501 Plate-Ass.-Side-R

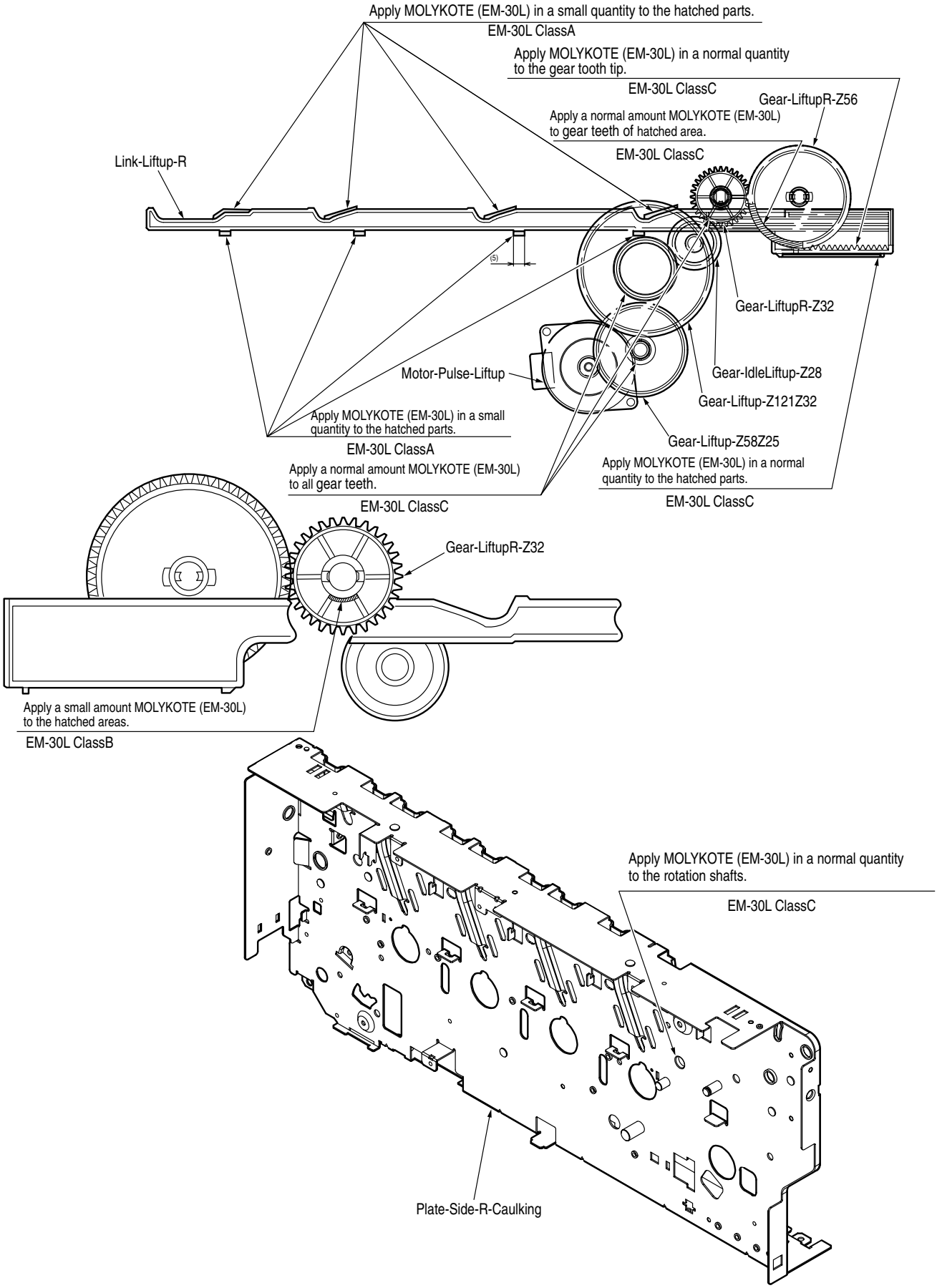

⑦ 43074901 Plate-Ass.-Side-L

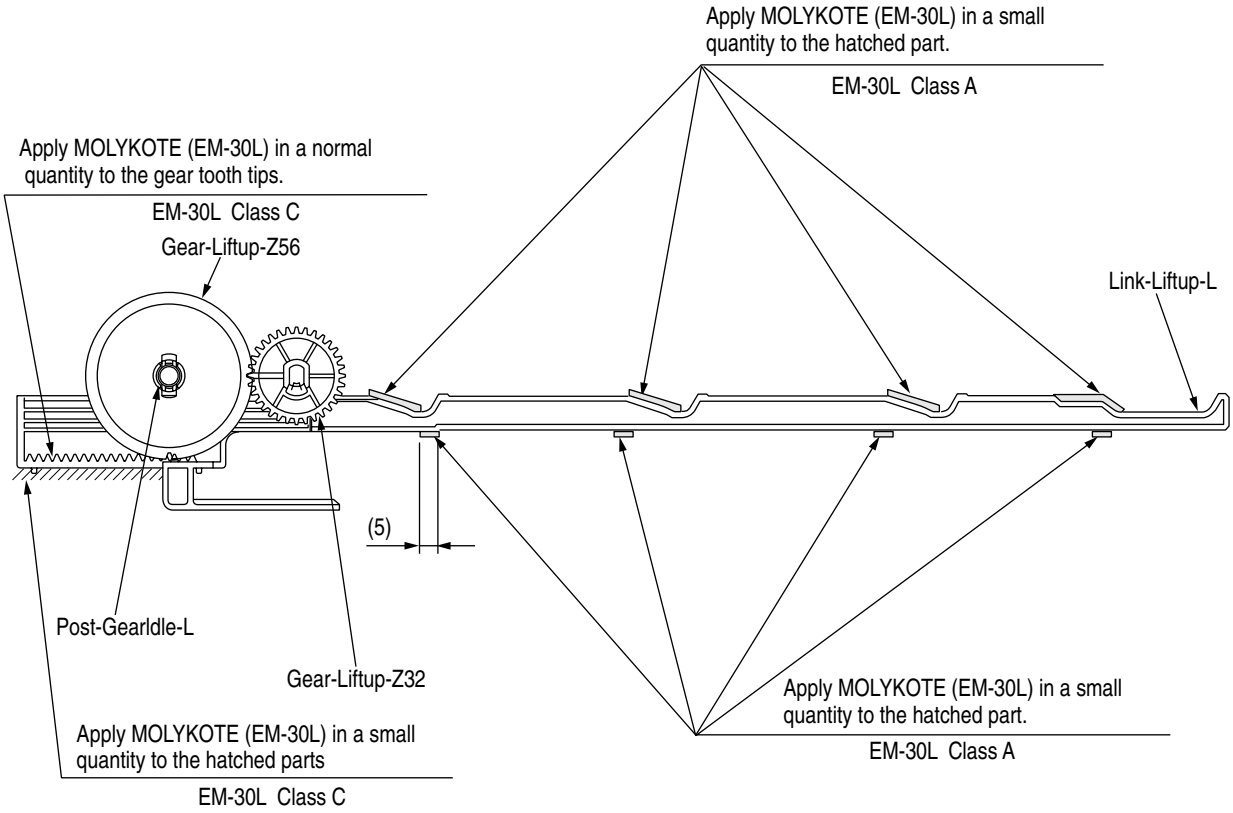

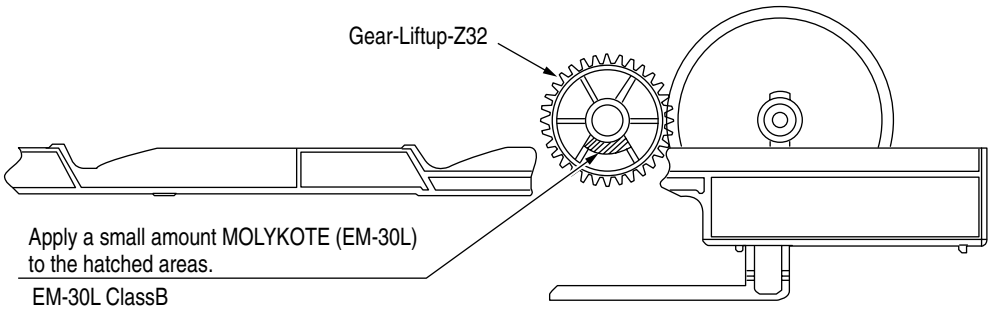

⑧ 42071401 Holder Assy.-Regist-L

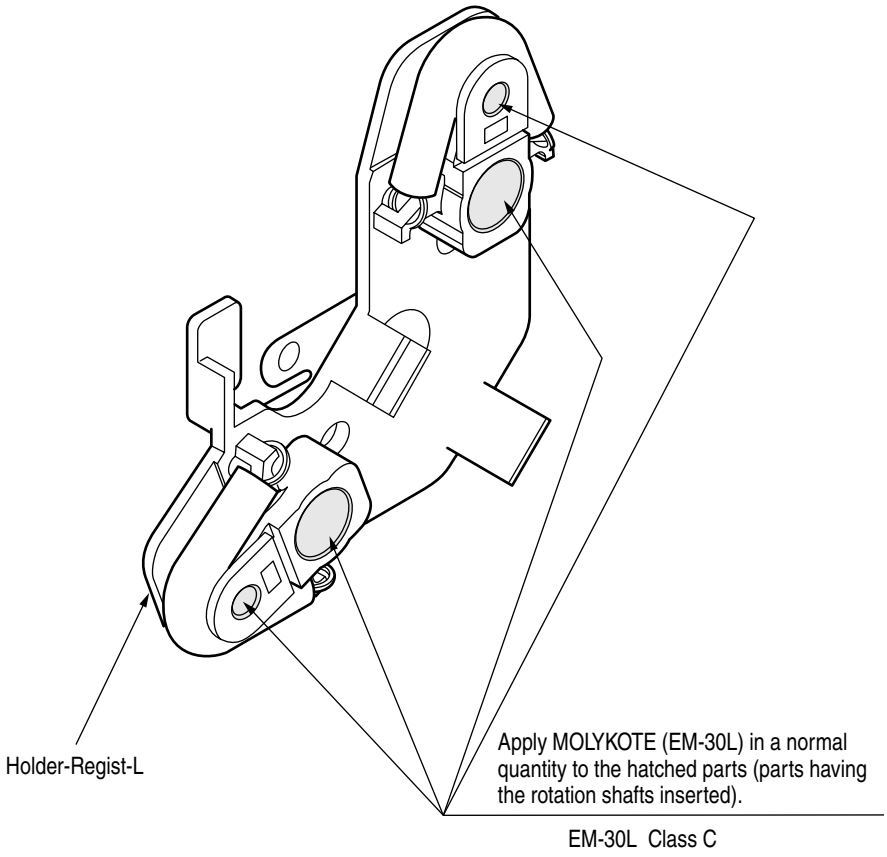

⑨ 42071901 Holder Assy.-Regist-R

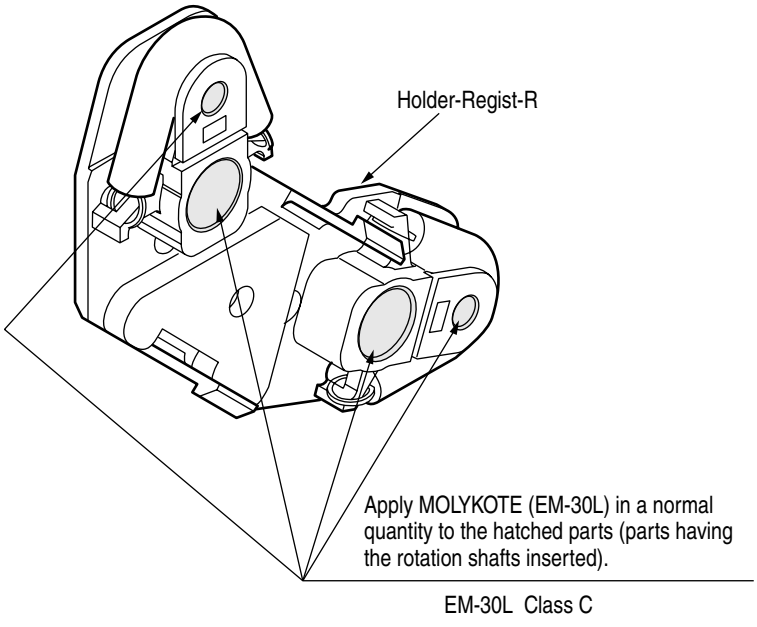

⑩ 43830401 Fuser-Assy

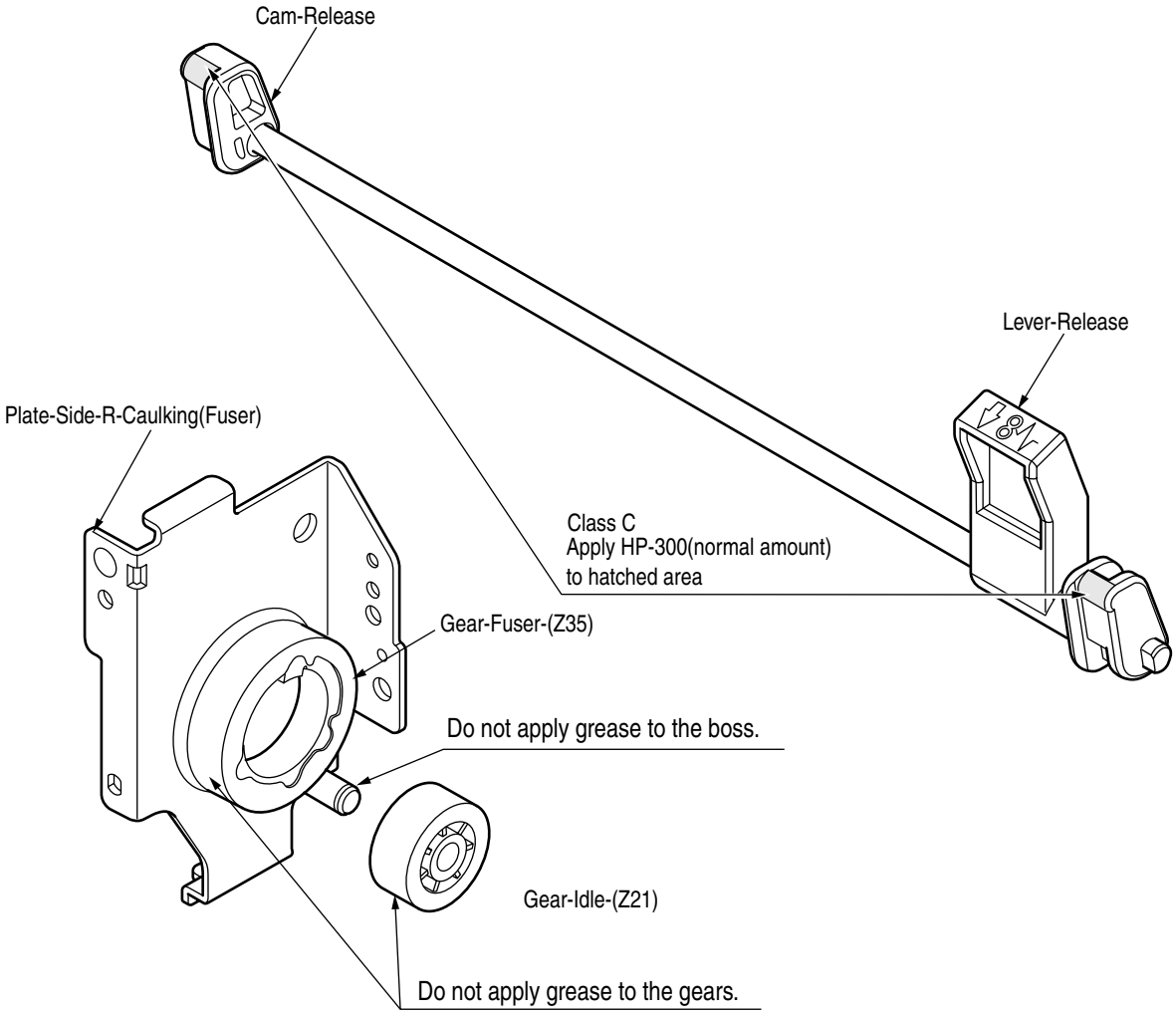

⑪ 43070401 Cassette-Assy

Assemble after applying MOLYKOTE (EM-30L) to the hatched parts in the illustration below (both right and left).

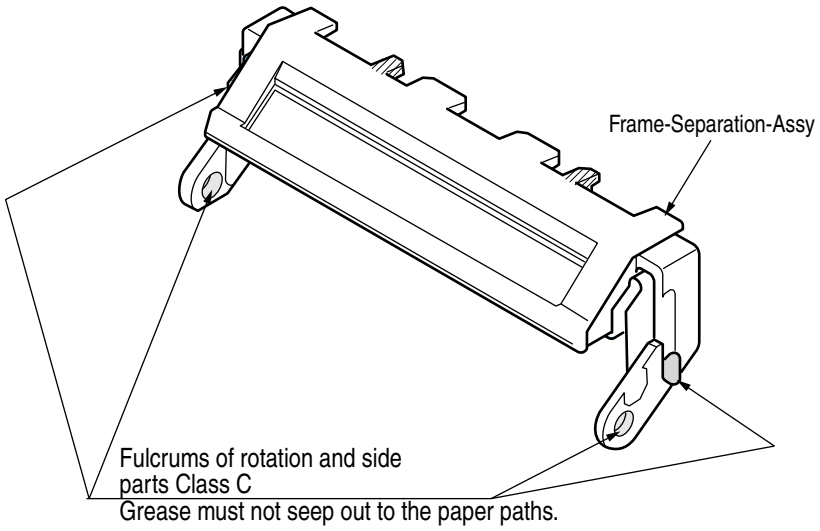

⑫ 43301501 Guide-Assy.-Eject-L

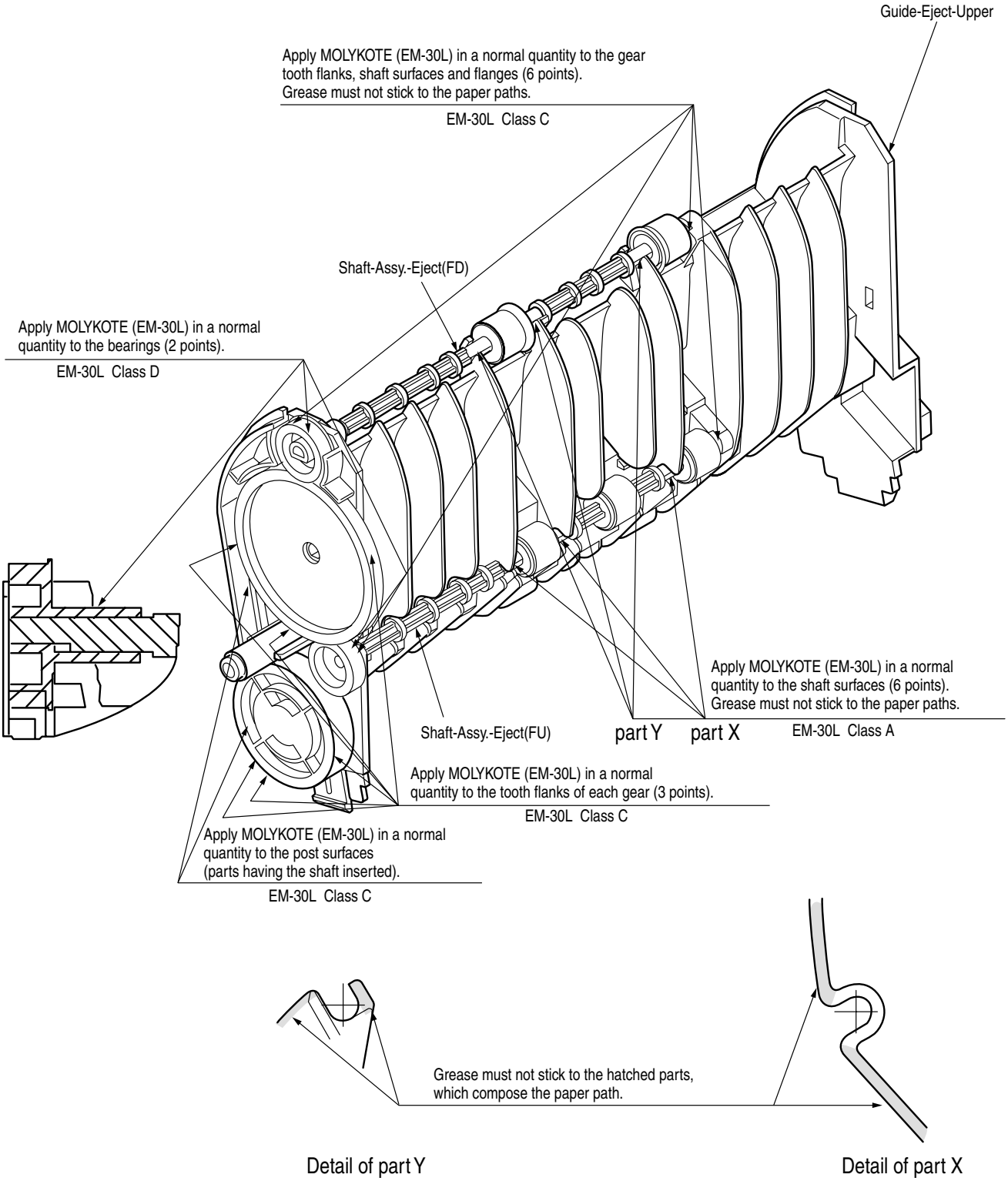

⑬ 43070201 Frame-Assy.-Base

Apply PM in a small quantity to the hatched part.
(1) Applying method: Wipe the part with a cloth slightly impregnated with PM.
(2) After applying PM, insert and pull out the cassette several times to ensure that no noise is emitted.

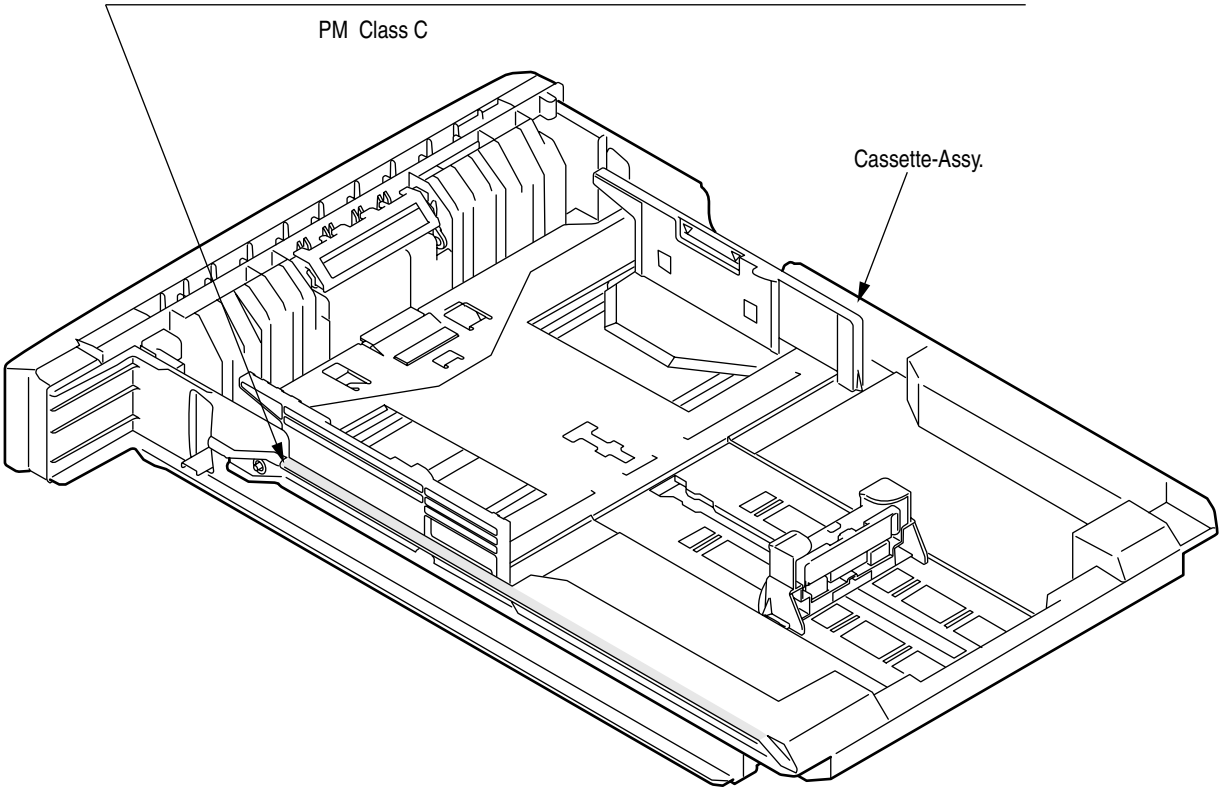

⑭-1 43070101 Printer-Unit

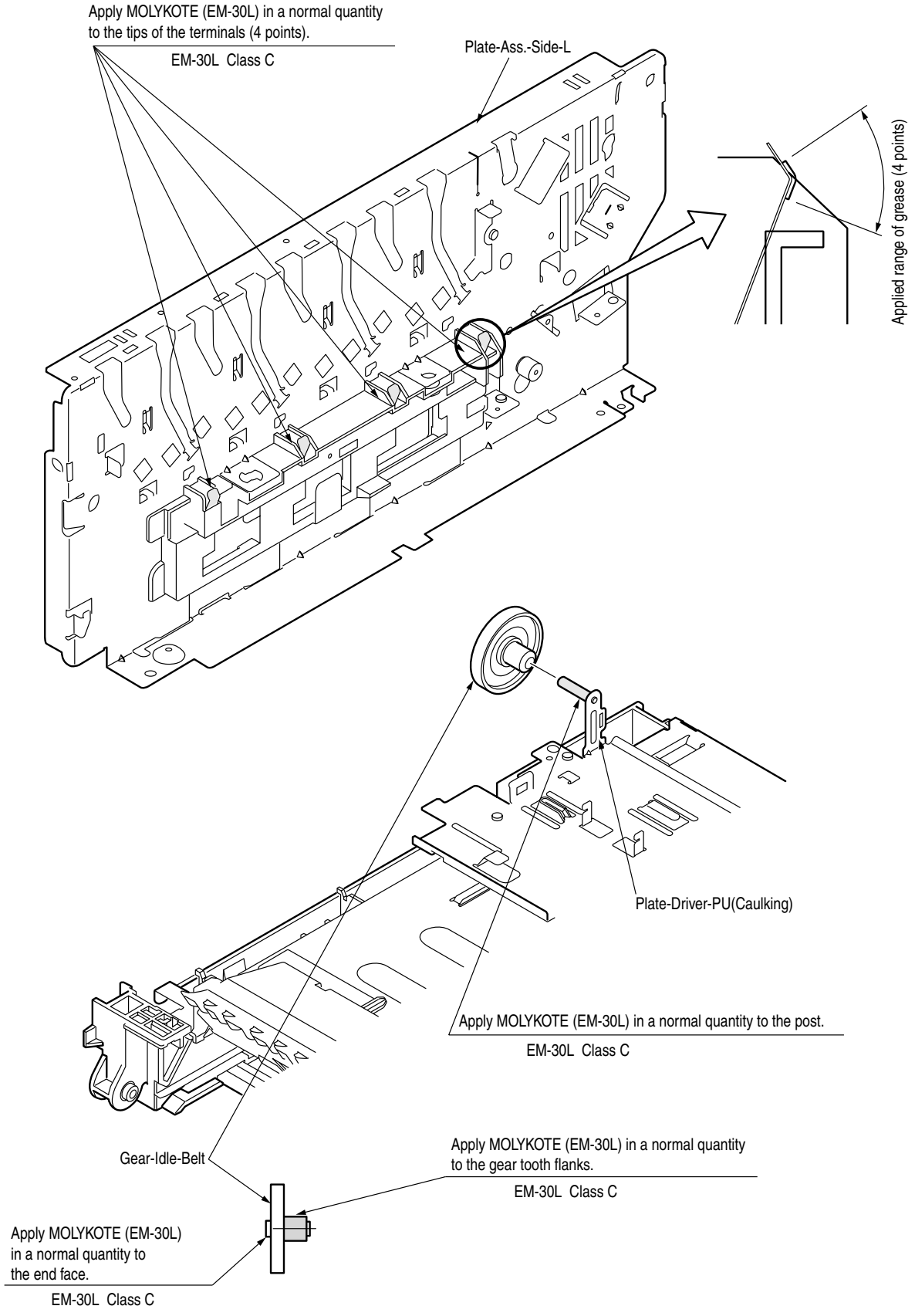

⑭-2 43827301 Printer-Unit

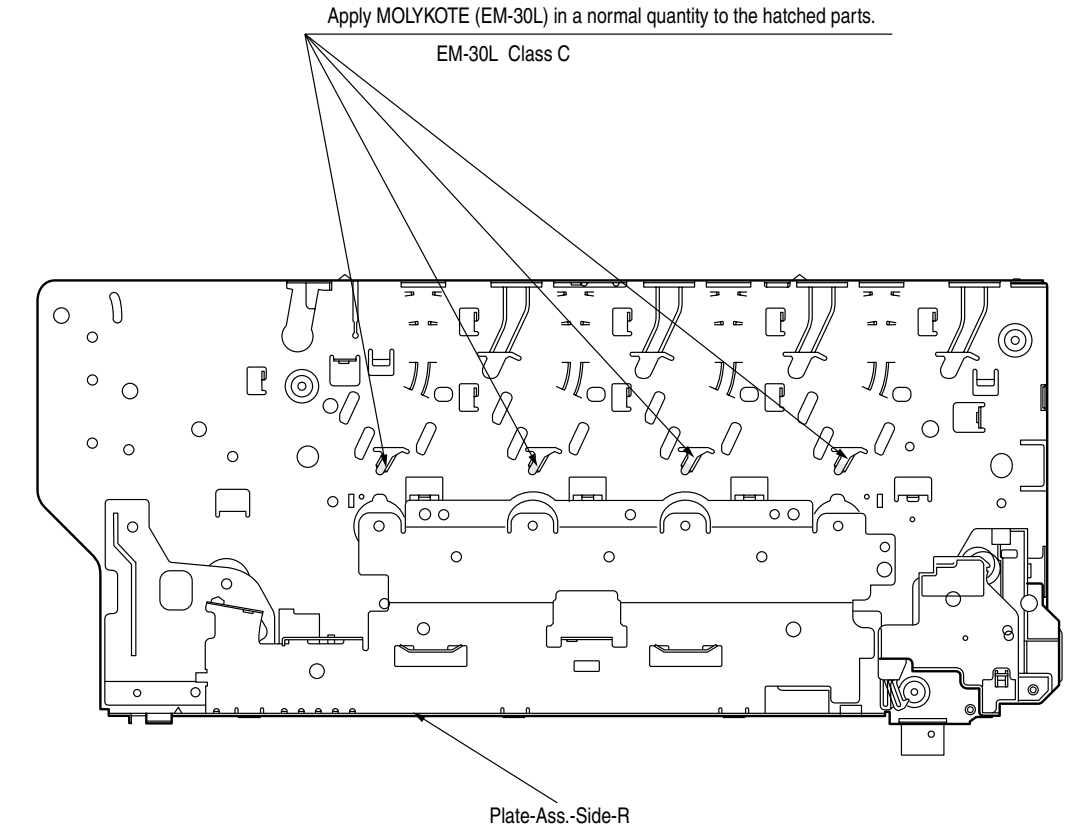

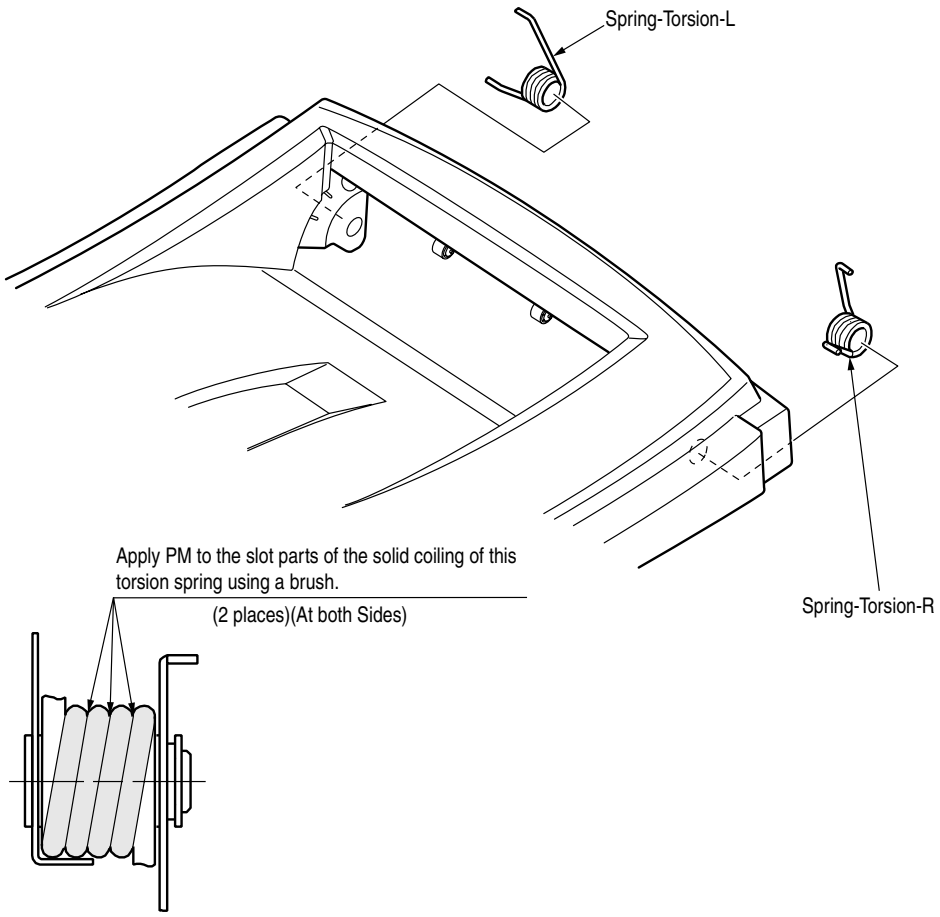

⑮ 43079601PA Belt-Unit

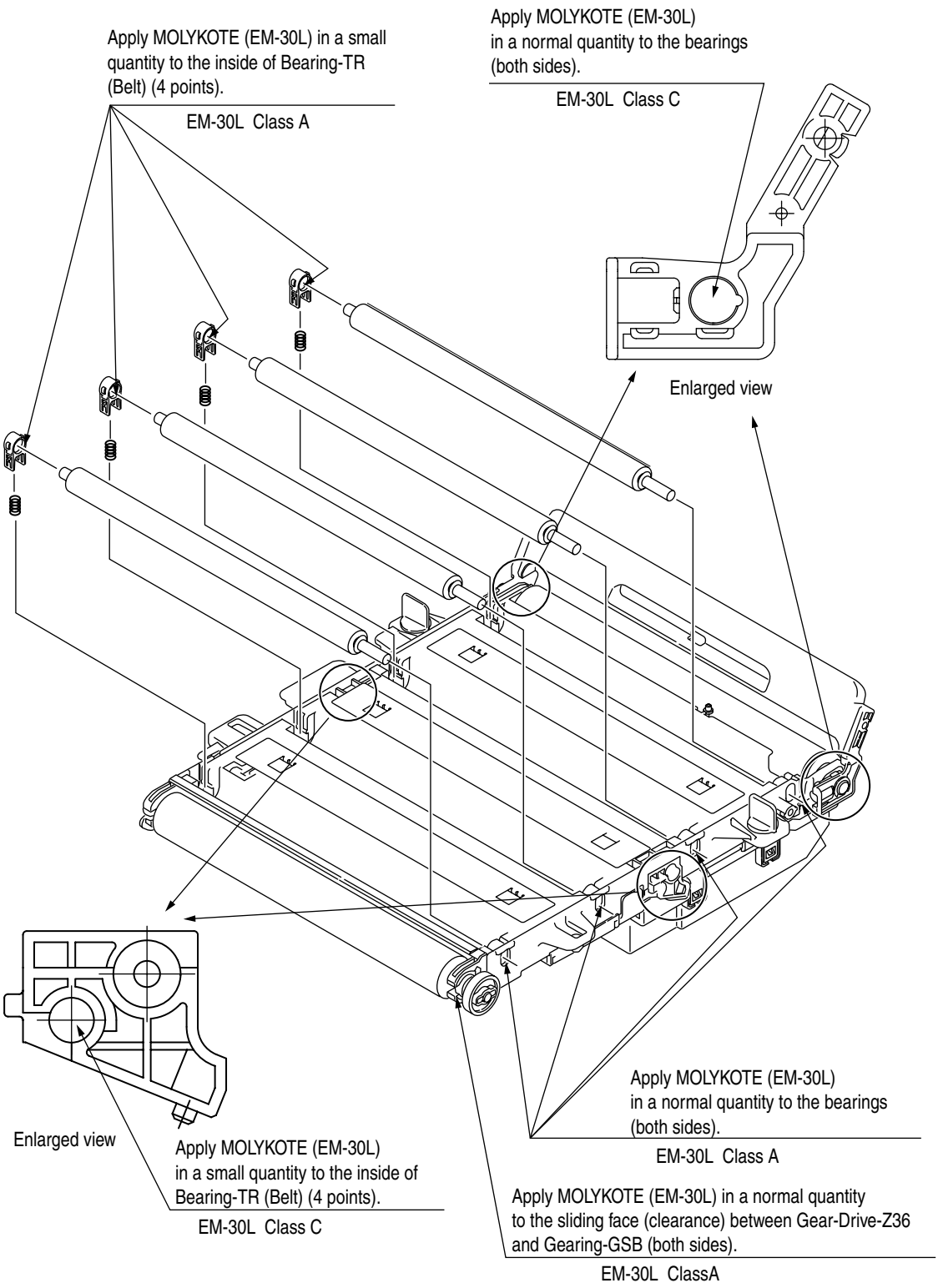

⑯ 42626501 Sensor-Assy-Color-Regist

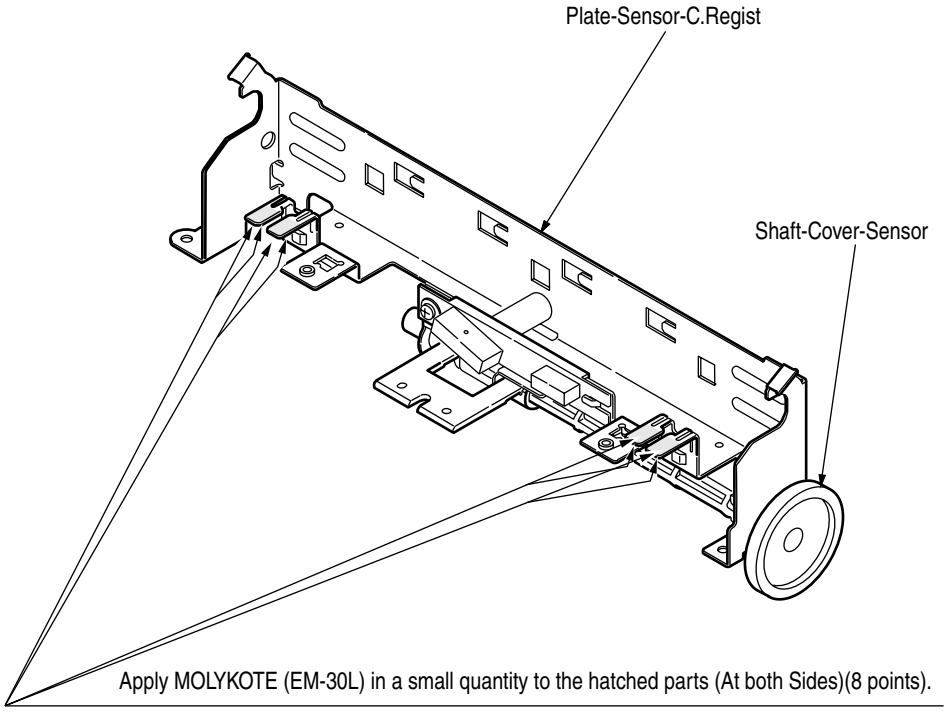

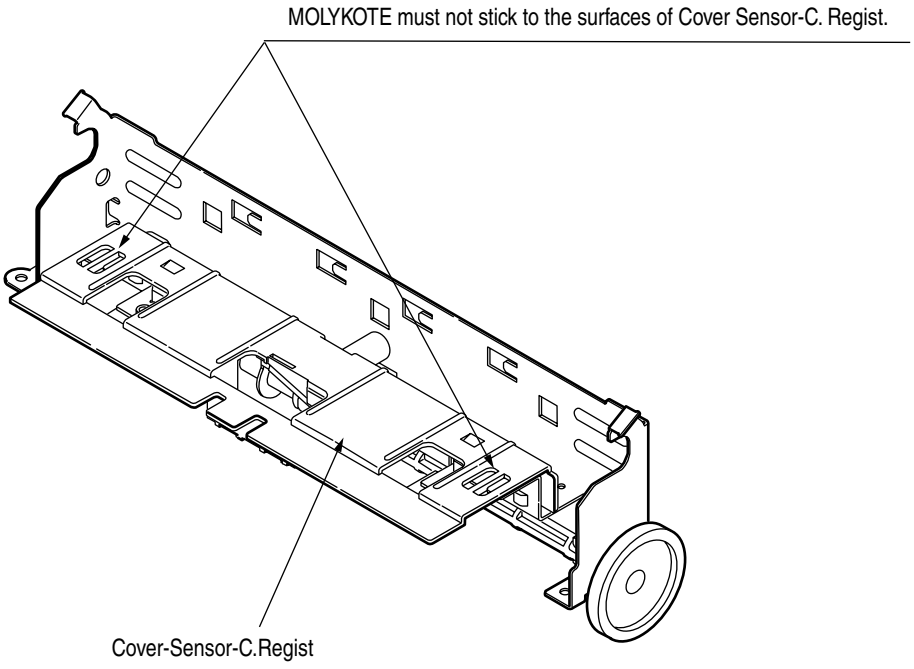

⑰ 43081301 Roller-Assy.-Idle(FD)

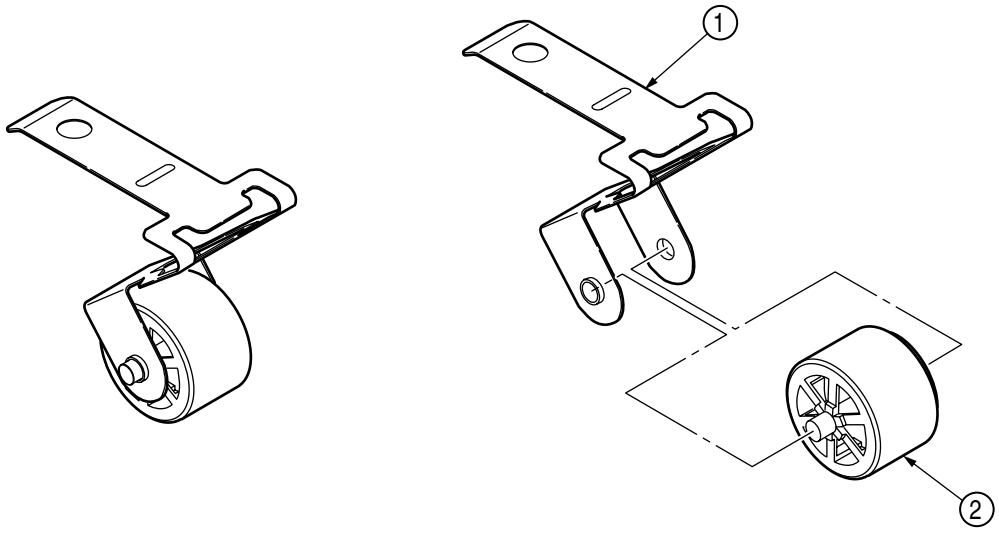

Disassembled view

Grease applying method:

Before assembling ② to ①, apply MOLYKOTE (EM-30L) in a very small quantity (Class S) to the sliding parts (hatched parts) between ① and ②.

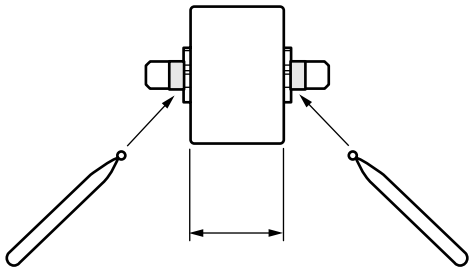

Range in which grease must not stick

⑱ 43301601 Roller-Assy.-BIAS(FU)C

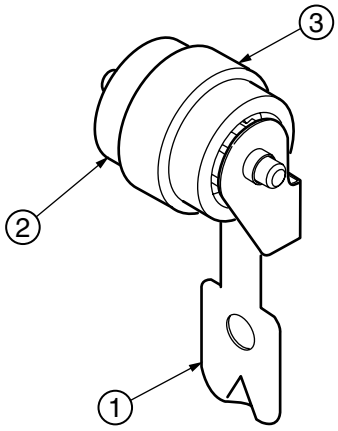

Grease applying method:

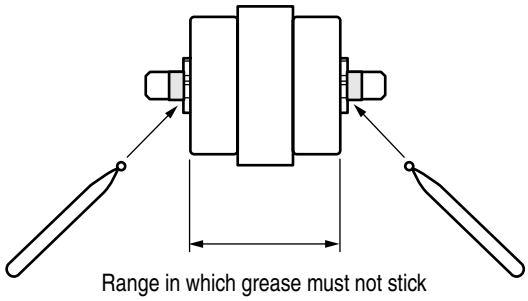

Before assembling ③ to ②, apply MOLYKOTE (EM-30L) in a very small quantity (Class S) to the sliding parts (hatched parts) of ②.

5. MAINTENANCE MENUS

The adjustment of this printer can be implemented using the maintenance utility and also by key input through the operator panel.
This printer provides maintenance menus, apart from the normal menus. Select the menu that best suits the purpose of your intended adjustment.

5.1 System maintenance menu (For maintenance personnel)

This menu is activated when the power is turned with the MENU+ and MENU- keys held down. The menu indications are given in English only, irrespective of the destination of the printer.

Note! Since this menu is likely to be changed depending on the destination or for other reason, it is not disclosed to the end users.

Table 5-1. Maintenance menu indication table (1/3)

Category	Item(1st Line)	Value(2nd Line)	DF	Function
SYSTEM MAINTE	ENTER PASSWORD	xxxxxxxxxxxxxx	000 000	
OKIUSER	OKIUSER	ODA OEL APS JP1 JPOEM1 OEMA OEML	*	Used to set the destination. JPOEM1: Japan OEM OEMA: Overseas OEM for A4 default OEML: Overseas OEM for Letter default When the menu is dismissed, the printer is automatically rebooted. Default is OEL.
MAINTENANCE MENU	HDD FORMAT (C6150/C6050/ C5950/C5750)	EXECUTE	-	Initializes the HDD. When this item is executed, the menu is dismissed, and initialization of the HDD begins. [Display conditions] * HDD mounted ("ADMIN MENU," "BLOCK DEV MENU" and "INITIAL LOCK" are YES, and "ADMIN MENU," "FILE SYS MAINTE," and "HDD" are "ENABLE.")
	FLASH FORMAT	EXECUTE	-	Initializes the Flash ROM. When this item is executed, the menu is dismissed, and formatting of the flash device mounted in the Resident (Onboard) begins. (CAUTION! NIC F/W will be erased.see section 7.5.4)
	MENU RESET	EXECUTE	-	Resets the EEPROM contents to the factory defaults. After the settings have been changed, the printer is automatically rebooted. * Certain special items are not initialized.

Table 5-1. Maintenance menu indication table (2/3)

Category	Item(1st Line)	Value(2nd Line)	DF	Function
CONFIG MENU	CODESET	TYPE1 TYPE2	*J *E	Function This menu is displayed on the printers for all destinations. TYPE1: Does not indicate Russian/ Greek. TYPE2: Indicates Russian/Greek. When the menu is dismissed, the printer is automatically rebooted. For destinations of OEL/APS/OEMA, TYPE2 is the default value, and for the rest of destinations, TYPE1 is the default value.
TEST PRINT MENU	TEST PRINT MENU	ENABLE DISABLE	*	Setting is made here to select either to display or not to display "PRT ID CHK PATN" and "ENG STATUS IPRINT" under "USER MENU" - "PRINT INFORMATION" category. If this item is set to "DISABLE," "PRT ID CHK PATN" and "ENG STATUS PRINT" will not be displayed at all. When the menu is dismissed after changing the setting, the printer is restarted.
PAGE CNT PRINT	PAGE CNT PRINT	ENABLE DISABLE	*	Setting is made here to select either to display or not to display "USER MENU" - "USAGE MENU" - "TOTAL PAGE COUNT."
FUSE KEEP MODE	FUSE KEEP MODE	EXECUTE	-	Pressing the ENTER key issues a command from CU to PU, making the printer ONLINE. A consumable part is replaced with a new one with the power switched on and the operation is checked (in this condition, the new consumable fuse is not cut, and the operation count is not added to the value of the old consumable part). Turning off the power terminates the check mode, and the mode becomes invalid next time the power is turned on.

Table 5-1. Maintenance menu indication table (3/3)

Category	Item(1st Line)	Value(2nd Line)	DF	Function
PERSONALITY (C6150/C6050/ C5950/C5750)	IBM5577	ENABLE DISABLE	*	Changes the default of support PDL language for each destination. The PDL language disabled in this menu will no longer be displayed in "USER MENU" - "SYS CONFIG MENU" - "PERSONALITY." If print data in the PDL language set to "DISABLE" is received, the printer displays INVALID DATA and discards the received data. (HP-GL/2 is an item now under development.) If IBM PPR III XL and EPSON FX are set to ENABLE on a printer for domestic market, its operation is not guaranteed.
	IBM PPR III XL	ENABLE DISABLE	*E *J	
	EPSON FX	ENABLE DISABLE	*E *J	
	HP-GL/2	ENABLE DISABLE	*	
CHANGE PASSWORD			-	
	NEW PASSWORD	xxxxxxxxxxxxxxx	-	
	VERIFY PASSWORD	xxxxxxxxxxxxxxx	-	
ENGINE DIAG MODE				Activates the self-diagnostic mode of the engine.

Operations of the switches and LCD indications produced during the self-diagnostic mode are different from the specifications for operation of the printer.
See 5.3.2 Self-diagnostic mode.

5.2 Maintenance utility

The maintenance utility is used to perform the adjustments of Table 5-2.
Details of the maintenance utility are described below.

(1) Maintenance Utility Operation Manual:

42678801FU01 Rev17 or later (Japanese)

42678801FU02 Rev17 or later (English)

(2) The maintenance utility programs are indicated below.
* The programs can be downloaded from the FTP server for manuals.
(Window Person in charge of manuals can be accessed.)

Applicable Operating System	File Name	Part Number
Win9xMe (Japanese/English version)	MuWin_Win9x.zip	42678801FW01 Rev.17 or later
WinNT/2000/XP (Japanese/English version)	MuWin_WinNT.zip	42678801FW02 Rev.17 or later

Table 5-2 Maintenance Utility Adjustment Items (1/3)

	Item	Adjustment	Section No. of the Maintenance Utility Operation	Operation on Operator Panel (Section No. corresponds to the Maintenance manual)
1	PU PCB Replacement	Copying of the EEPROM of PU PCB. Adjustment purpose: The above data is copied to another PU PCB in the event that the current PU PCB needs to be replaced due to maintenance replacement.	Subsect. 2.4.1.1.1 Subsect. 2.4.2.1.1, if copying of corrected data of LED head is involved.	Invalid operation
2	PU Serial Number Setting	Reprogramming printer serial number recorded on PU Adjustment Purpose: Set for a board replaced for maintenance when it is impossible to copy EEPROM of the PU PCB (I/F error etc.)	Section 2.4.1.1.2.1	Invalid operation
3	Factory/Shipping Mode	Switching between Factory mode and Shipping mode. Adjustment purpose: If the EEPROM of the PU PCB cannot be copied (I/F error, etc.), setting is made on a maintenance replacement PCB. Since the maintenance replacement PCB usually comes set to the Factory mode, it needs to be set to the Shipping mode by this function.	Section 2.4.1.1.2.2 Section 2.4.1.1.6.4	Subsect. 5.3.2.10
4	Replacement of CU PCB	Rewrite of the EEPROM set values of the CU PCB. Adjustment purpose: The EEPROM data is rewritten to another CU PCB in the event that the current CU PCB needs to be replaced due to maintenance replacement.	Subsect. 2.4.1.1.3	Invalid operation
5	Serial Number information setup	Selection of the printer serial number recorded on the CU, and rewrite of the output mode and device serial numbers.	Subsect.2.4.1.1.4.3	Invalid operation
6	Set information of PCB items	Verification of the serial No. information and Factory/Shipping mode.	Subsect. 2.4.1.1.7	Invalid operation
7	USB software update	Update of USB software	Section 2.4.2.2.1	Invalid operation
8	NIC software update	Update of NIC software	Section 2.4.2.2.2	Invalid operation
9	NIC Web Page update	Update of NIC Web Page	Section 2.4.2.2.3	Invalid operation
10	Mac address setup	Setup of Mac address	Section 2.4.2.2.4	Invalid operation
11	Consumable part counter maintenance function	Copying of consumable part counters Drum counter (Y, M, C, K) Fuser counter Belt counter Toner counter (Y, M, C, K) Adjustment purpose: When half-used consumable parts are diverted to another printer, the value of each consumable part is copied.	Section 2.4.2.2.4	Invalid operation

Table 5-2 Maintenance Utility Adjustment Items (2/3)

	Item	Adjustment	Section No. of the Maintenance Utility Operation	Operation on Operator Panel (Section No. corresponds to the Maintenance manual)
12	Setup of sensitivity correction value of color density sensor [Prohibited to use]	Setup of the sensitivity correction value of color density sensor	Prohibited to use	Prohibited to use
16	Indication of LED head serial number *1	Verification of LED head serial number	Subsect.2.4.2.2.7.3	Subsect. 5.3.2.12
17	Setup of destination/PnP information	Setup/verification of the printer (CU) destination, device ID and USB ID.	Section 2.4.1.2.6	Subsect. 5.4.3
18	Indication of consumable part counters	Verification of the current values of consumable part counters.	Section 2.4.1.3.1	Subsect. 5.1
19	Check of menu set values	Indication of the set values of each menu set on the printer (CU) .	Section 2.4.1.3.2	Menu Map print (See User's Manual.)
20	Destination/PnP data Setting	Check/setting of destination of the printer (CU), device ID, USB ID	Section 2.4.1.2.6	Section 5.5.3
18	Display of the Consumable Counter	Confirmation of the current value of the consumable counter	Section 2.4.1.3.1	Section 5.1 ENG STATUS PRINT
19	Check of Menu Settings	Displaying each menu setting value specified in the printer (CU)	Section 2.4.1.3.2	Menu Map Printing (See User’s manual)
20	Check of printer information	Verification of the Mac address and versions of various F/Ws of the printer.	Section 2.4.1.3.3	Menu Map Printing (See User’s manual)
21	Check of mounted CPU/memory values	Verification of the information of CPU and memory installed on the printer (CPU).	Section 2.4.1.3.4	Menu Map Printing (See User’s manual)
22	Test print	Execution of local print function and transmission of specified files. Adjustment purpose: Verification of individual operation of the printer and transmission of downloaded files.	Section 2.4.1.4.1	Each local print (See System Specification.)
23	Switch scan test	Execution of switch scan test. Adjustment purpose: Operation check of each sensor.	Subsect. 2.4.1.5.1	Subsect. 5.3.2.3
24	Motor clutch test	Execution of motor clutch test. Adjustment purpose: Operation check of each motor, clutch, etc.	Subsect. 2.4.1.5.2	Subsect. 5.3.2.4
25	Color registration test	Execution of color registration test.	Subsect. 2.4.1.5.3	Subsect. 5.3.2.6
26	Density correction test	Execution of density correction test.	Subsect. 2.4.1.5.4	Subsect. 5.3.2.7

Table 5-2 Maintenance Utility Adjustment Items (3/3)

	Item	Adjustment	Section No. of the Maintenance Utility Operation	Operation on Operator Panel (Section No. corresponds to the Maintenance manual)
27	Automatic density correction control parameter setup [Prohibited to use]	Setup of automatic density setting control parameters.	Prohibited to use	Prohibited to use
28	Counter indication	Verification of the counters for consumable parts, continuance of consumable parts and waste toner.	Subsect. 2.4.1.5.7	Subsect.5.3.2.8 Subsect. 5.3.2.9
29	Local parameter setup	Verification of the switching between Factory mode and Shipping mode, and the state of Fuse.	Subsect. 2.4.1.5.8	Subsect. 5.3.2.10
30	Engine parameter setting	Verification of the switching between Factory mode and Shipping mode, and the state of Fuse.	Subsect. 2.4.1.5.9	Subsect. 5.3.2.11

*1: With functional limitation

Note! Items [Prohibited to use] must not be operated/set. There is a risk of abnormal operation of the printer.

5.3 Functions of user's maintenance menu

5.3.1 Maintenance menu (For end users)

There is a maintenance menu category among the normal menu categories. (Different from the system maintenance menus)
The items that can be set under this menu are indicated below.

Maintenance Menu

Values in shaded areas are initial settings.

Category	Operator Panel Display		Function
	Item (Upper Display)	Value (Lower Display)	
Maintenance Menu	MENU RESET	EXECUTE	Initializes menu settings.
	SAVE MENU	EXECUTE	Stores current menu settings.
	RESTORE MENU	EXECUTE	Changes menu settings to stored ones. Displayed only when menu settings have been stored.
	POWER SAVE	ENABLE DISABLE	Sets Power Save mode enabled/disabled. Shift time to enable Power Save mode can be changed using "POWER SAVE SHIFT TIME" on "SYSTEM CONFIG. MENU".
	PAPER BLACK SET	0 +1 +2 -2 -1	Corrects print nonuniformity due to temperature variation. With faded images, change the value. With scattering or snowing images in print output of high print density, decrement the value. With faded images in print output of high print density, increment the value.
	PAPER COLOR SET	0 +1 +2 -2 -1	Corrects print nonuniformity due to temperature variation. With faded images, change the value. With scattering or snowing images in print output of high print density, decrement the value. With faded images in print output of high print density, increment the value.
	TRNSPR BLACK SET	0 +1 +2 -2 -1	Used to correct dispersion of printing due to temperature difference. Change the value if a printed OHP sheet is blurred. f an output shows a scattered- or snowing-like phenomenon in a high-density print part, decrement the value. If an output is blurred, increment the value.
	TRNSPR COLOR SET	0 +1 +2 -2 -1	Used to correct dispersion of printing due to temperature difference. Change the value if a printed OHP sheet is blurred. If an output shows a scattered- or snowing-like phenomenon in a high-density print part, decrement the value. If an output is blurred, increment the value.
	SMR SETTING	-3 -2 -1 0 +1 +2 +3	To correct variations in print results caused by temperature/humility conditions and difference in print density/frequency. Change the setting when print quality is uneven.

Category	Operator Panel Display		Function
	Item (Upper Display)	Value (Lower Display)	
Maintenance Menu	BG SETTING	-3 -2 -1 0 +1 +2 +3	To correct variations in print results caused by temperature/humility conditions and difference in print density/frequency. Change the setting when background is dark.

5.3.2 Self-diagnostic mode

Individual explanation of LEVEL0 and LEVEL1.

5.3.2.1 Operator panel

The explanation of the operations relating to the self-diagnosis presupposes, the following operation panel arrangement is required.

Self-diagnostic mode layout (Overall)

(1) Transition of menu items

xxxxx	Level transition is possible only when a part is displayed.
xxxxx	Transition of is activated with [MENU-] or [MENU+].

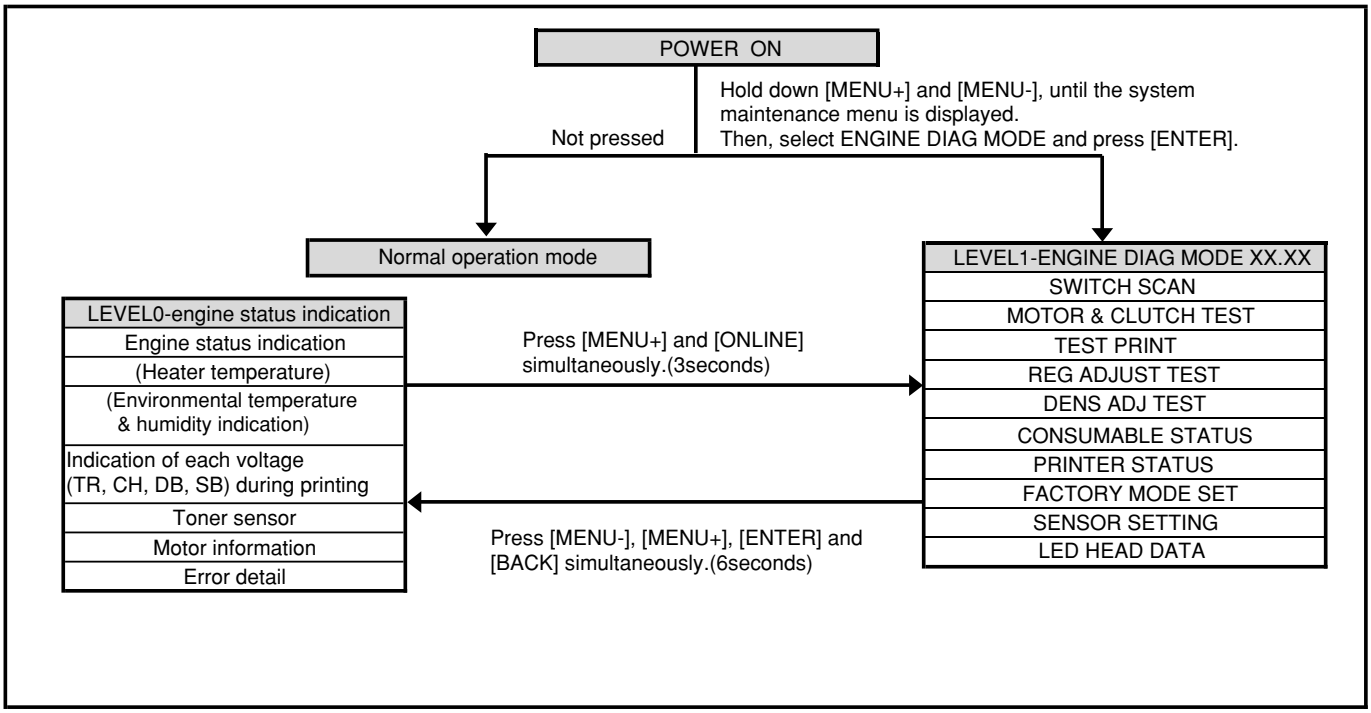

LEVEL0

(1) Switchover of menu items

The transition of [xxxxx] is activated when [BACK] or [ONLINE] is pressed and held down, or [MENU+] or [MENU-] is pressed briefly.

The transition of [xxxxx] is activated with [MENU+] or [MENU-].
The item selection screen is restored when [BACK] is pressed and held down.

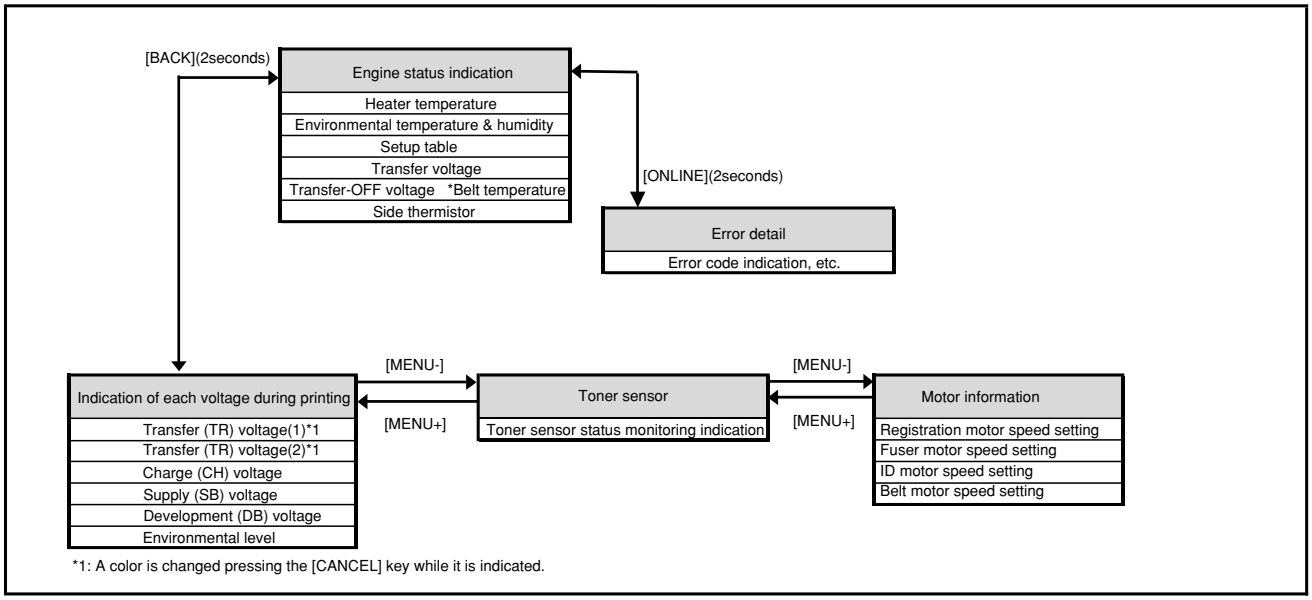

*1: A color is changed pressing the [CANCEL] key while it is indicated.

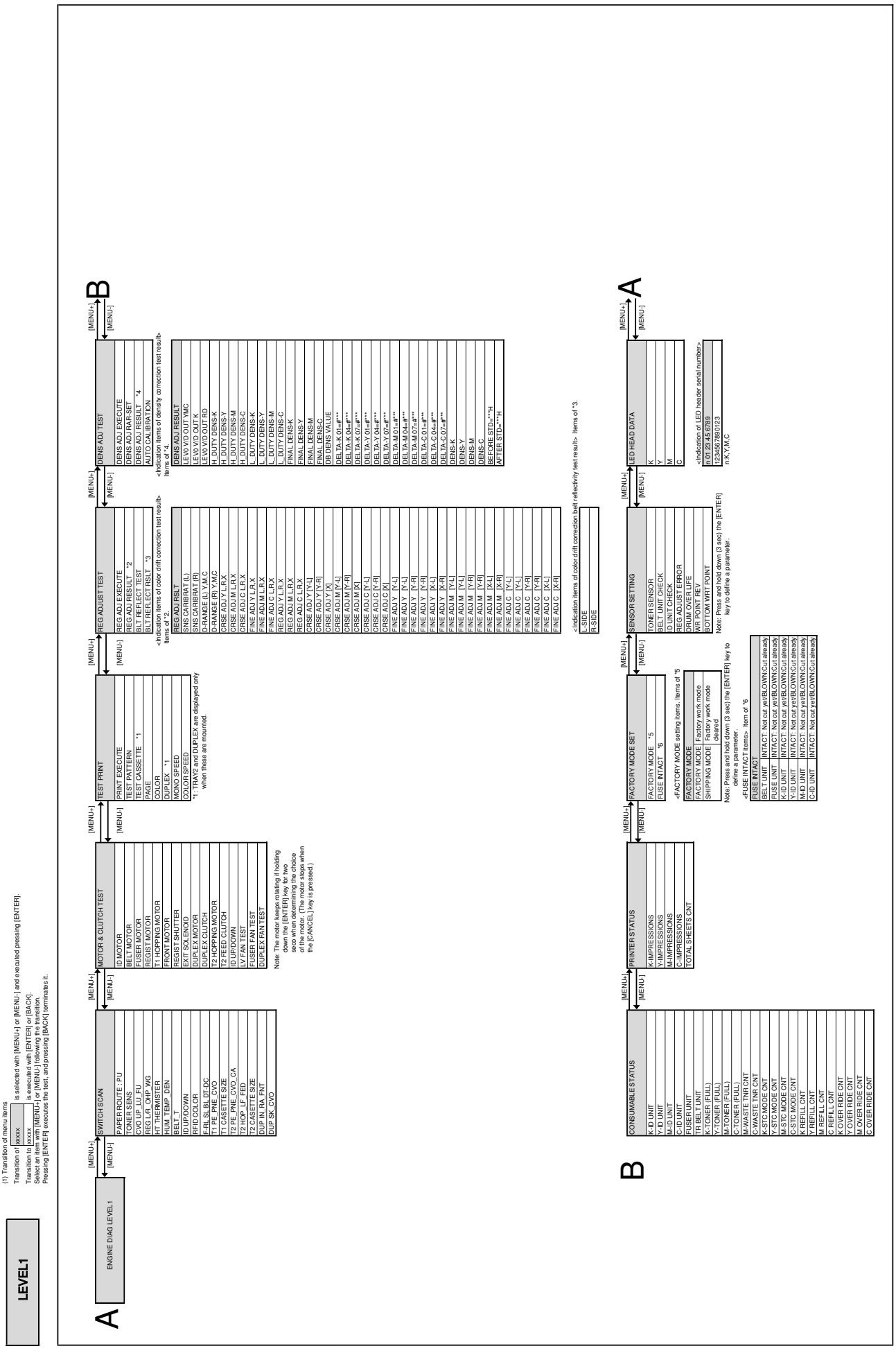
LEVEL1
(1) Transition of menu items
Transition of xxxxx is selected with [MENU+] or [MENU-] and executed pressing [ENTER].
Transition to xxxxx is executed with [ENTER] or [BACK].
Select an item with [MENU+] or [MENU-] following the transition.
Pressing [ENTER] executes the test, and pressing [BACK] terminates it.
ENGINE DIAG LEVEL 1
SWITCH SCAN
PAPER ROUTE : PU
TONER SENS
CVO UP_LU_FU
REG LR_OHP_WG
HT THERMISTER
HUM_TEMP_DEN
BELT_T
ID UP/DOWN
RFID COLOR
F-RL_SL_BL_DT_DC
T1 PE_PNE_CVO
T1 CASETTE SIZE
T2 PE_PNE_CVO_CA
T2 HOP_LF_FED
T2 CASETTE SIZE
DUP IN_RA_FNT
DUP SK_CVO
MOTOR & CLUTCH TEST
ID MOTOR
BELT MOTOR
FUSER MOTOR
REGIST MOTOR
T1 HOPPING MOTOR
FRONT MOTOR
REGIST SHUTTER
EXIT SOLENOID
DUPLEX MOTOR
DUPLEX CLUTCH
T2 HOPPING MOTOR
T2 FEED CLUTCH
ID UP/DOWN
LV FAN TEST
FUSER FAN TEST
DUPLEX FAN TEST
Note: The motor keeps rotating if holding down the [ENTER] key for two secs when determining the choice of the motor. (The motor stops when the [CANCEL] key is pressed.)
TEST PRINT
PRINT EXECUTE
TEST PATTERN
TEST CASSETTE *1
PAGE
COLOR
DUPLEX *1
MONO SPEED
COLOR SPEED
*1: TRAY2 and DUPLEX are displayed only when these are mounted.
REG ADJUST TEST
REG ADJ EXECUTE
REG ADJ RESULT *2
BLT REFLECT TEST
BLT REFLECT RSLT *3
<Indication items of color drift correction test result> Items of *2.
REG ADJ RSLT
SNS CARIBRAT (L)
SNS CARIBRAT (R)
D-RANGE (L) Y,M,C
D-RANGE (R) Y,M,C
CRSE ADJ Y L,R,X
CRSE ADJ M L,R,X
CRSE ADJ C L,R,X
FINE ADJ Y L,R,X
FINE ADJ M L,R,X
FINE ADJ C L,R,X
REG ADJ M L,R,X
REG ADJ C L,R,X
CRSE ADJ Y [Y-L]
CRSE ADJ Y [Y-R]
CRSE ADJ Y [X]
CRSE ADJ M [Y-L]
CRSE ADJ M [Y-R]
CRSE ADJ M [X]
CRSE ADJ C [Y-L]
CRSE ADJ C [Y-R]
CRSE ADJ C [X]
FINE ADJ Y [Y-L]
FINE ADJ Y [Y-R]
FINE ADJ Y [X-L]
FINE ADJ Y [X-R]
FINE ADJ M [Y-L]
FINE ADJ M [Y-R]
FINE ADJ M [X-L]
FINE ADJ M [X-R]
FINE ADJ C [Y-L]
FINE ADJ C [Y-R]
FINE ADJ C [X-L]
FINE ADJ C [X-R]
<Indication items of color drift correction belt reflexivity test result> Items of *3.
L-SIDE
R-SIDE
DENS ADJ TEST
DENS ADJ EXECUTE
DENS ADJ RAR-SET
DENS ADJ RESULT *4
AUTO CALIBRATION
<Indication items of density correction test result> Items of *4.
DENS ADJ RSLT
LEVO VID OUT YMC
LEVO VID OUT K
LEVO VID OUT RD
H_DUTY DENS-K
H_DUTY DENS-Y
H_DUTY DENS-M
H_DUTY DENS-C
L_DUTY DENS-K
L_DUTY DENS-Y
L_DUTY DENS-M
L_DUTY DENS-C
FINAL DENS-K
FINAL DENS-Y
FINAL DENS-M
FINAL DENS-C
DB DENS VALUE
DELTA-K 01=#***
DELTA-K 04=#***
DELTA-K 07=#***
DELTA-Y 01=#***
DELTA-Y 04=#***
DELTA-Y 07=#***
DELTA-M 01=#***
DELTA-M 04=#***
DELTA-M 07=#***
DELTA-C 01=#***
DELTA-C 04=#***
DELTA-C 07=#***
DENS-K
DENS-Y
DENS-M
DENS-C
BEFORE STD-ADJ **H
AFTER STD-ADJ **H
CONSUMABLE STATUS
K-ID UNIT
Y-ID UNIT
M-ID UNIT
C-ID UNIT
FUSER UNIT
TR BELT UNIT
K-TONER (FULL)
Y-TONER (FULL)
M-TONER (FULL)
C-TONER (FULL)
M-WASTE TNR CNT
C-WASTE TNR CNT
K-STC MODE CNT
Y-STC MODE CNT
M-STC MODE CNT
C-STC MODE CNT
K REFILL CNT
Y REFILL CNT
M REFILL CNT
C REFILL CNT
K COVER RIDE CNT
Y COVER RIDE CNT
M COVER RIDE CNT
C COVER RIDE CNT
PRINTER STATUS
K=IMPRESSIONS
Y=IMPRESSIONS
M=IMPRESSIONS
C=IMPRESSIONS
TOTAL SHEETS CNT
FACTORY MODE SET
FACTORY MODE *5
FUSE INTACT *6
<FACTORY MODE setting items. Items of *5
FACTORY MODE
FACTORY MODE | Factory work mode
SHIPPING MODE | Factory work mode cleared
Note: Press and hold down (3 sec) the [ENTER] key to define a parameter.
<FUSE INTACT Items> Item of *6
FUSE INTACT
BELT UNIT | INTACT: Not cut yet/BLOWN:Cut already
FUSE UNIT | INTACT: Not cut yet/BLOWN:Cut already
K-ID UNIT | INTACT: Not cut yet/BLOWN:Cut already
Y-ID UNIT | INTACT: Not cut yet/BLOWN:Cut already
M-ID UNIT | INTACT: Not cut yet/BLOWN:Cut already
C-ID UNIT | INTACT: Not cut yet/BLOWN:Cut already
SENSOR SETTING
TONER SENSOR
BELT UNIT CHECK
ID UNIT CHECK
REG ADJUST ERROR
DRUM OVER LIFE
WR POINT REV
BOTTOM WRT POINT
Note: Press and hold down (3 sec) the [ENTER] key to define a parameter.
LED HEAD DATA
K
Y
M
C
<Indication of LED header serial number>
n:01 23 45 6789
12345678901 23
n:K,Y,M,C
A
B
A
B

5.3.2.2 Normal self-diagnostic mode (Level 1)

The menus of the normal self-diagnostic mode are indicated below.

Table 5-3 Maintenance Utility Adjustment Items

	Item	Self-diagnosis Menu	Adjustment	Maintenance Utility
1	Switch scan test	SWITCH SCAN	Checking of inlet sensor and switch	Not operable
2	Motor clutch test	MOTOR&CLTCH TEST	Operation test of motor and clutch	Not operable
3	Execution of test print	TEST PRINT	Print of test patterns built in PU	Not operable
4	Color drift correction test	REG ADJUST TEST	Judgment of good/bad color drift correction mechanism.	Not operable
5	Density correction test	DENS ADJ TEST	Judgment of good/bad density correction mechanism.	Not operable
6	Indication of consumable part counter	CONSUMABLE STATUS	Indication of consumed state of consumables	Not operable
7	Indication of consumable part continuance counter	PRINTER STATUS	Indication of lifetime consumed state of consumables	Not operable
8	Factory/ Shipping mode switching	FACTORY MODE	Switching between Factory mode and Shipping mode	No.3 No.30
9	Check of Fuse status	SET	Indication of the status of each fuse	Not operable
10	Engine parameter setup	SENSOR SETTING	Setup of Enable/Disable of error detection by various sensors	Not operable
11	Indication of LED head serial number	LED HEAD DATA	Indication of the serial number of LED head data	Not operable

5.3.2.2.1 Activation method for self-diagnostic mode (Level 1)

1. The system maintenance menu mode is activated when the power is turned on with the MENU+ and MENU- keys held down simultaneously
2. Press the MENU+ or MENU- key several times, until "ENGINE DIAG MODE" is displayed. Pressing the ENTER key causes "DIAGNOSTIC MODE" to appear.

DIAGNOSTIC MODE
XX.XX.XX FACTORY/SHIPPING

3. XX.XX.XX of "DIAGNOSTIC MODE XX.XX.XX" which is displayed in the LCD section is the version of the PU firmware. The set value of FACTORY WORKING MODE is indicated in the lower line to the right. Normally, S-MODE for "SHIPPING" is displayed.
4. Pressing the MENU+ or MENU- key takes you to each self-diagnostic step. (The menu items rotate as the MENU+ or MENU- key is pressed.)

5.3.2.2.2 Deactivation of self-diagnostic mode

1. Turn the power off, and on again after ten seconds.

5.3.2.3 Switch scan test

This self-diagnosis is practiced to check the inlet sensors and switches.

1. Activate the self-diagnostic mode (Level 1), press and hold down the MENU+ or MENU- key, until "SWITCH SCAN" appears in the upper line of the display section, and then, press the ENTER key. (The MENU+ key increments a test item, and the MENU- key decrements a test item.)

SWITCH SCAN

2. Press and hold down the MENU+ or MENU- key, until the item corresponding to the unit of Table 5-3 now to be tested appears in the lower line of the display section. (The MENU+ key increments a test item, and the MENU- key decrements a test item.)
3. Pressing the ENTER key initiates the test, and the name and current status of the corresponding unit are displayed.

   Note) Pressing and holding down (2 sec) the [ENTER] key when a motor is decided causes the motor to keep running.

PAPER ROUTE:PU
1=H 2=L 3=H 4=L

   Conduct this operation on each unit (Figure 5-1). The indications are produced in the corresponding LCD display. (The indications vary from one sensor to another. See Table 5-3 for details).
4. Pressing the CANCEL key restores the status of Item 2 above.
5. Repeat Items 2 to 4, as needed.
6. To end the test, press the BACK key. (The status of Item 1 will be restored).

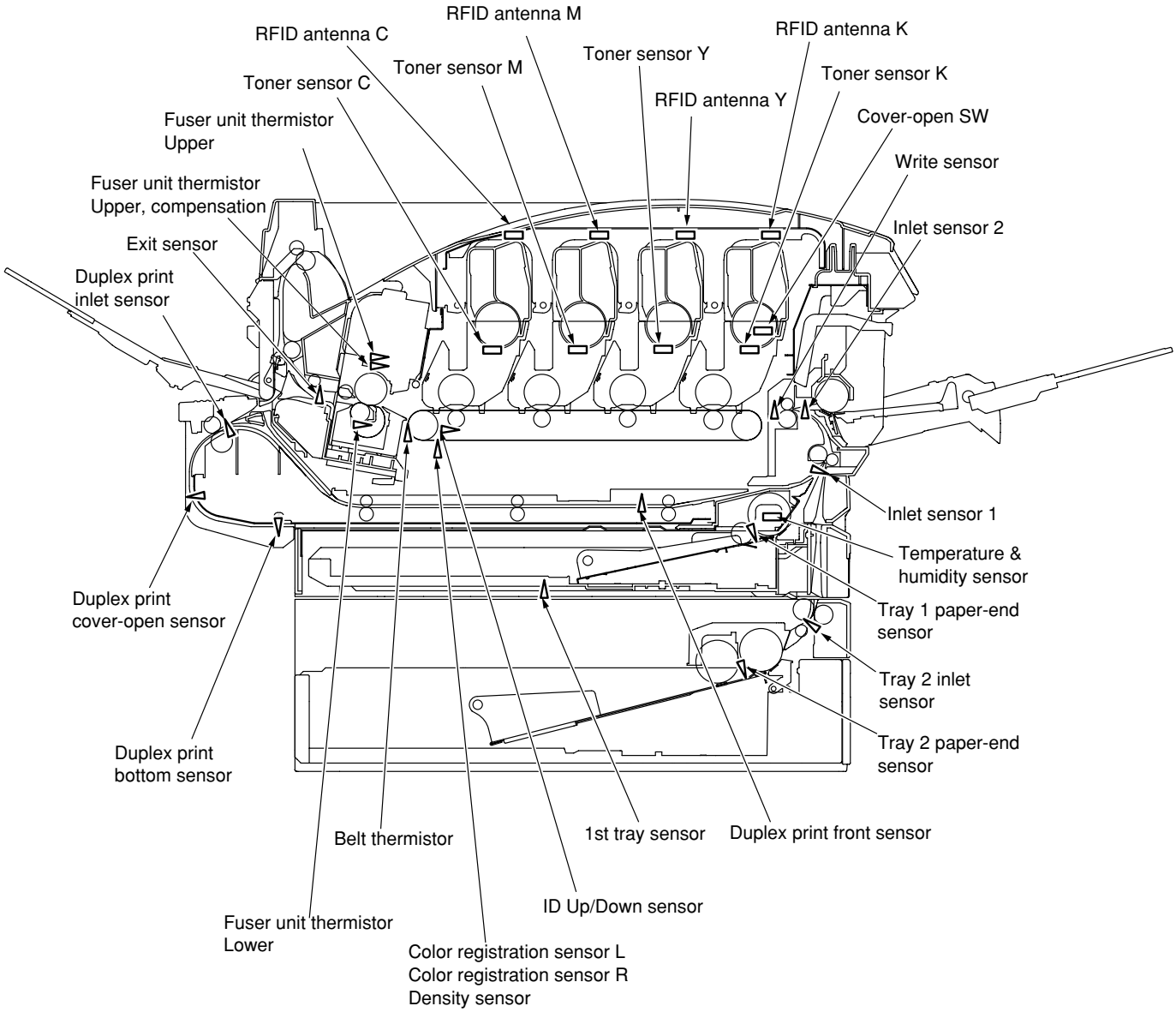

Figure 5-1 Switch Sensor Positions

Table 5-3 SWITCH SCAN Display Detail

No functionality

*1: Indication only, without functionality

*2: L is indicated when a cover is open.

*3: Status of 1st cassette is indicated.
This function is effective only when a 2nd tray is installed.

		1	2			3		4	
NO	Upper line of display section	Detail	Display	Detail	Display	Detail	Display	Detail	Display
1	PAPER ROUTE : PU	Entrance Cassette Sns(IN1)	H:Paper out L:Paper present	Entrance-FF Sns(IN2)	H:Paper out L:Paper present	Entrance Belt Sns(WR)	H:Paper out L:Paper present	Exit Sns(OUT)	H:Paper out L:Paper present
2	TONER SENS	Toner-K Sns	H:Blocked L:Reflected	Toner-Y Sns	H:Blocked L:Reflected	Toner-M Sns	H:Blocked L:Reflected	Toner-C Sns	H:Blocked L:Reflected
3	CVO UP_LU_FU	Cover-Upper	H:Close L:Open						
4	REG L/R_OHP_WG	Aligment-Left-Sns	AD value: ***H	Aligment-Right-Sns	AD value: ***H				
5	HT THERMISTER	Upper-Center-Thermister	AD value: ***H	Lower-Center-Thermister	AD value: ***H			Ambient Temp -Thermister (Frame Temp)	AD value: ***H
6	HUM_TEMP_DEN	Hum Sns	AD value: ***H	Temperture-Sns	AD value: ***H	DensityK-Sns	AD value: ***H	DensityYMC-Sns	AD value: ***H
7	BELT_T	Belt-Thermister	AD value: ***H						
8	ID UP/DOWN							ID UpDown Sns	H:Down L:Up
9	RFID COLOR L*2	Toner cartridge-K present/absent	UID: ***H	Toner cartridge-Y present/absent	UID: ***H	Toner cartridge-M present/absent	UID: ***H	Toner cartridge-C present/absent	UID: ***H
10	F-RL SL BL DT-DC*1								
11	T1 PE_PNE_CVO	1st-Paper-End Sns	H:Paper out L:Paper present						
12	T1 CASETTE SIZE*1								
13	T2 PE_PNE_CVO_CA	2nd-Paper-End Sns	H:Paper out L:Paper present					1st-Cassette-Sns*3	H:Cassette present L:Cassette absent
14	T2 HOP_LF_FED					2nd-Feed Sns	H:Paper out L:Paper present		
15	T2 CASETTE SIZE*1								
16	DUP IN_RA_FNT	Dup-In Sns	H:Paper out L:Paper present	Dup-Rear Sns	H:Paper out L:Paper present	Dup-Front Sns	H:Paper present L:Paper out		
17	DUP SK_CVO	Dup-Stack Sns(In2)	H:Paper out L:Paper present	Dup-Cover Open Sns	H:Close L:Open				

Oki Data CONFIDENTIAL

5.3.2.4 Motor clutch test

This self-diagnosis is practiced to test motors and clutches.

1. Activate the self-diagnostic mode (Level 1), press and hold down the MENU+ or MENU- key, until "MOTOR & CLUTCH TEST" appears in the upper line of the display section, and then, press the ENTER key. (The MENU+ key increments a test item, and the MENU- key decrements a test item.)
2. Press and hold down the MENU+ or MENU- key, until the item corresponding to the unit of Table 5-4 now to be tested appears in the lower line of the display section. (The MENU+ key increments a test item, and the MENU- key decrements a test item.)

MOTOR & CLUTCH TEST
ID MOTOR

3. Pressing the ENTER key initiates the test, causing the unit name to start blinking, and the corresponding unit is driven for ten seconds (See Figure 5-2).

   Note! After the unit has been driven for ten seconds, the status of Item 2. above is restored. The unit is driven again when the corresponding switch is pressed again.
   The clutch solenoid repeats ON/OFF operations in a normal printing drive. (Clutches that cannot be driven individually due to their structural reason are driven along with their motors.) * "ID UP/DOWN" continues being driven, until the "CANCEL" key is depressed.
   The motor keeps rotating if holding down the [ENTER] key for two seconds when determining the choice of the motor. (The motor stops when the [CANCEL] key is pressed.)

4. Pressing the CANCEL key stops the drive of the corresponding unit. (The indication of the corresponding unit will be maintained.)
5. Repeat Items 2 to 4, as needed.
6. To end the test, press the BACK key. (The status of Item 1 will be restored).

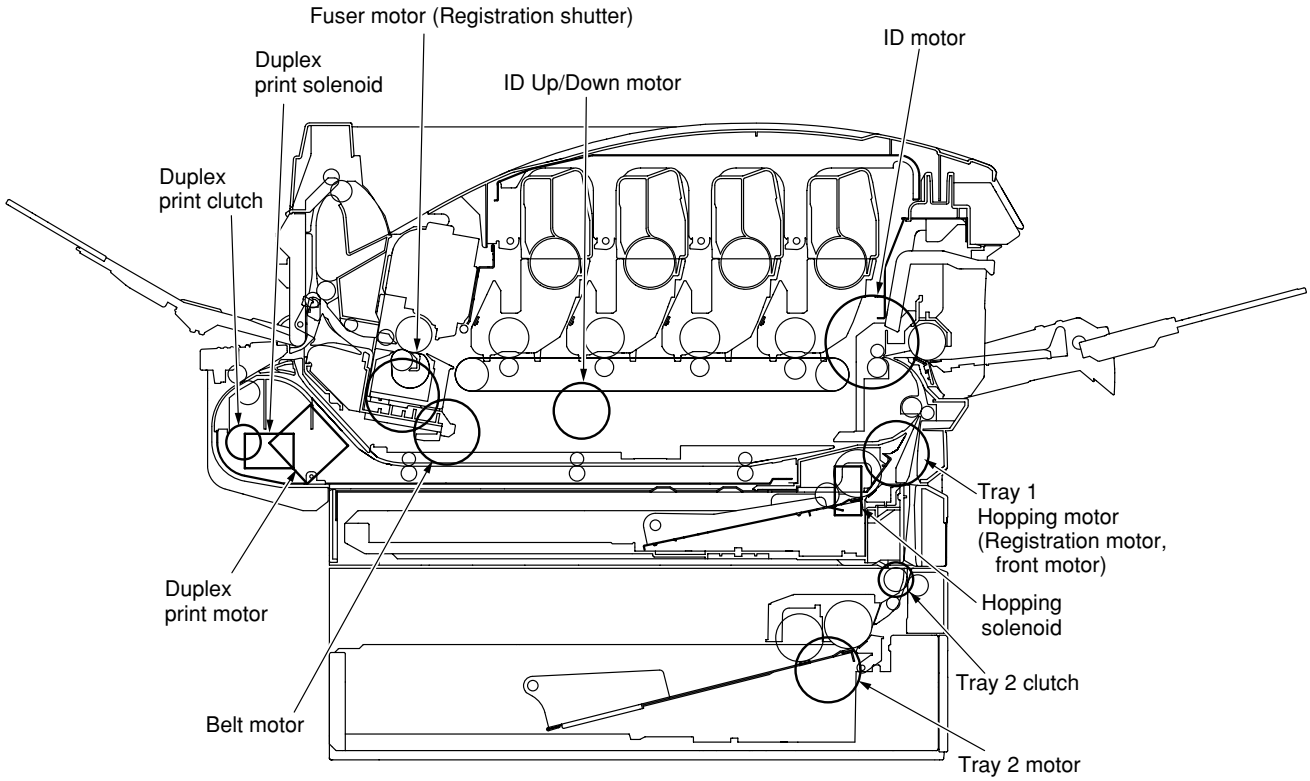

Figure 5-2

Table 5-4

Unit Name	Description of Control for Unit Driving
ID motor	To be driven with all the IDs (Black/yellow/magenta/cyan) removed.
Belt motor	To be driven with all the IDs (Black/yellow/magenta/cyan) removed.
Fuser motor	-
Registration motor	(Tray 1 hopping motor only is driven.)
Tray 1 hopping motor	To be driven with Cassette 1 removed. (Hopping solenoid driven simultaneously)
Front motor	(Tray 1 hopping motor rotates in reverse.)
Color registration (Registration) shutter	(Fuser unit motor rotates in reverse.)
Duplex print solenoid (EXIT)	-
Duplex print motor	-
Duplex print clutch	-
Tray 2 motor	To be driven with Cassette 2 removed.
Tray 2 clutch	-
ID UP/DOWN	In closed state of TOP/FRONT cover
LV FAN TEST	-
FUSER FAN TEST	-

5.3.2.5 Test print

This self-diagnosis is practiced to print test patterns built in PU. Other test patterns are stored in the controller.
This print cannot be used to check the print quality.
To diagnose abnormal images, follow Section 7.

1. Activate the self-diagnostic mode (Level 1), press and hold down the MENU+ or MENU- key, until "TEST PRINT" appears in the upper line of the display section, and then, press the ENTER key. (The MENU+ key increments a test item, and the MENU- key decrements a test item.)
2. The lower line of the display section shows the set items that are applicable to the test print only. Press and hold down the MENU+ or MENU- key, until the corresponding item appears, and press the ENTER key. (The MENU+ key increments a test item, while the MENU- key decrements a test item.)(If the set values of the items are not necessary (Default settings), go on to Item 5.)
3. When the ENTER key is depressed after holding down the MENU+ or MENU- key in Item 2 above, a set item is displayed in the upper line of the display section, and a set value, in the lower line. Pressing the MENU+ key increments the set value, and pressing the MENU- key decrements it (the set value finally displayed will be applied). Pressing the BACK key defines the value and restores Item 2. Repeat Item 3, as needed.

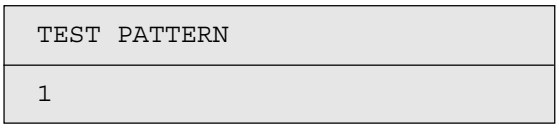

Indication	Set value	Function
PRINT EXECUTE	–	Pressing the ENTER key initiates print and pressing the CANCEL key ends the print (Page by page).
TEST PATTERN	0	0: Blank sheet print 1 - 7: See the following page (Pattern print). 8 - 15: Blank sheet print
CASSETTE	TRAY1	Select the paper feed source. If TRAY 2 is not mounted, indication of TRAY2 will not be produced.
	TRAY2	
	MPF	
PAGE	0000	Setup of the number of test-print pages
COLOR	ON	Select between Color print or Monochrome print. * If ON is specified, ON/OFF needs to be specified for each color.
	OFF	
DUPLEX (Indicated only when Duplex is mounted)	2 PAGES STACK	Two-sided print is conducted with two-page stack.
	OFF	OFF is selected for two-sided print.
	1PAGES STACK	Two-sided print is conducted with one-page stack.
MONO SPEED	DEFAULT	The monochrome print speed is set.
	LOW	LOW:26ppm
	HIGH	HIGH:32ppm DEFAULT:26ppm
COLOR SPEED	DEFAULT	The color print speed is set.
	LOW	LOW:24ppm
	HIGH	HIGH:26ppm DEFAULT: 24ppm

* denotes a default value. Items set here are valid only in this test mode (Not written to the EEPROM).

Notes!

PAGE setup ---------- After shifting the digit of the set value with the MENU+ key or MENU- key, press the ONLINE key. The set value will be incremented. Pressing the CANCEL key decrements it.

COLOR setup ---------- Pressing the ENTER key after selecting ON causes the data indicated below to appear on the panel.

Print setup for each color --- Pressing the MENU+ key or MENU- key activates shifting. Pressing the ONLINE key or CANCEL key switches between ON and OFF. Pressing the BACK key restores the original panel indications.

COLOR	→	Y:ON M:ON
ON		C:ON K:ON

4. When the ENTER key is depressed while "PRINT EXECUTE" remains displayed in the lower line of the display section in the operation of Item 2., the test print takes place with the set values specified in Items 2 and 3.

   Pressing the CANCEL key stops the test print.

   If any of the alarms indicated in the Detail column of the table below is detected when test print is started or during execution, it will be indicated on the panel, and the test print will be interrupted. (For details on the errors, see Subsection 5.3.2.14 Details of panel indications. In the case of a PU test print, the comments displayed will be different.)

Panel Display	Detail
PAPER END SELECTED TRAY	The tray is out of paper.
DUPLEX UNIT IS NOT INSTALLED	A duplex unit is not installed.
SELECTED TRAY IS NOT INSTALLED	The selected tray is not installed.
REMOVE PAPER OUT OF DUPLEX	An internal error of the duplex unit occurred.

Print Patterns (Cannot be used for checking print quality.)

Patterns 0 and 8 to 15 ... Blank sheet print

Pattern 1

Pattern 2

Pattern 3

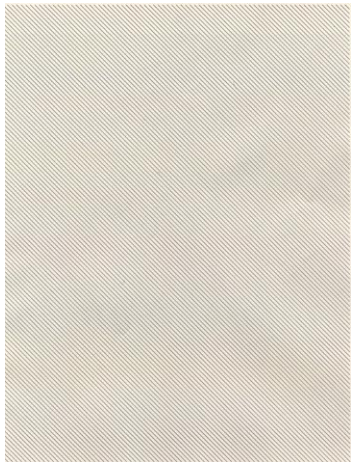

Pattern 4

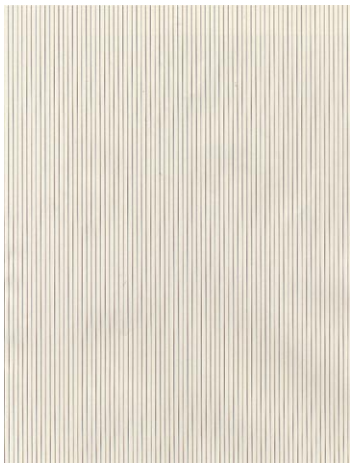

Pattern 5

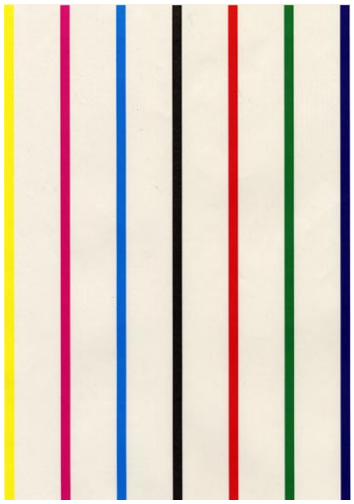

Pattern 6

Pattern 7

Note! If the solid print (Pattern 7) available among the local print functions is conducted with 100% of each color, offset will take place. To prevent this offset, it will be necessary to make the print setup of each color as specified in 3 of Subsection 5.3.2.5 and to limit the colors to be printed simultaneously to two or less when conducting the solid print No. 7.

- When print is executed, the following message is displayed:

```
P=***
W=***
```

P: Number of test-print pages (Unit: sheets)
W: Print wait time (Unit: seconds)

- Pressing the MENU+ key switches over the indication.

```
T=***  U=***[###]
H=*** %L=***[###]
```

U: *** = Measured value of upper heater temperature [Unit: ˚C]
[###] = Target temperature for print execution [Unit: ˚C]
L : *** = Measured value of lower thermistor [Unit: ˚C]
[###] = AD value of lower thermistor reading [Unit: HEX]
T: Measured value of environmental temperature [Unit: ˚C]
H: Measured value of environmental humidity [Unit: %]

- Pressing the MENU+ key switches over the indication.

```
KTR=*.** YTR=*.**
MTR=*.** CTR=*.**
```

YTR, MTR, CTR and KTR denote the transfer voltage set values of the respective colors (Unit: KV).

- Pressing the MENU+ key switches over the indication.

```
KR=*.** YR=*.**
MR=*.** CR=*.**
```

KR: BLACK transfer roller resistance value [Unit: uA]
YR: YELLOW transfer roller resistance value [Unit: uA]
MR: MAGENTA transfer roller resistance value [Unit: uA]
CR: CYAN transfer roller resistance value [Unit: uA]

- Pressing the MENU+ key switches over the indication.

```
ETMP=*** UTMP=***
REG=**** EXT=***
```

ETMP: Hopping motor constant-speed correction parameter (Environmental temperature)[Unit: DEC]
UTMP: Fuser motor constant-speed correction parameter (Target fuser temperature)[Unit: DEC]
REG: Hopping motor constant-speed timer value (I/O set value)[Unit: HEX]
EXT: Fuser motor constant-speed timer value (I/O set value)[Unit: HEX]

- Pressing the MENU+ key switches over the indication.

ID=****

KID, YID, MID and CID denote the constant-speed timer values of the respective ID motors (I/O set values) [Unit: HEX].

- Pressing the MENU+ key switches over the indication.

BELT=****
FRM[***](xxx)

BELT: Constant speed timer value of belt motor (I/O set value) [Unit: HEX]
FRM : [***] = AD value of frame thermistor reading [Unit: HEX]
(xxx) = Frame temperature [Unit: ˚C]

- Pressing the MENU+ key switches over the indication.

DB:k**y**m**c**

DB: Development voltage setup table ID No. [Unit: HEX]

- Pressing the MENU+ key switches over the indication.

TR1:k**y**m**c**
TR2:k**y**m**c**

TR1: Transfer voltage parameter VTR1 table ID No. [Unit: HEX]
TR2: Transfer voltage parameter VTR2 table ID No. [Unit: HEX]

- Pressing the MENU+ key switches over the indication.

TROFF:**
BELT xxx(***)

TROFF: Transfer OFF voltage setup table ID No. [Unit: HEX]
BELT: *** = Belt temperature [Unit: ˚C]
xxx = AD value of belt thermistor reading [Unit: HEX]

5. Repeat Items 2 to 4, as needed.
6. Press the CANCEL key to terminate the test. (Status of Item 1 restored)

5.3.2.6 Color registration adjustment test

This self-diagnosis is practiced to conduct testing on the color registration function of the printer and to locate the cause of color drift.
Restore the normal operation of the printer by following the troubleshooting procedure if any error is issued during the color registration test.

1. Activate the self-diagnostic (Level 1) mode, and press and hold down the [MENU+] key or [MENU-] key, until the following message appears:

REG ADJUST TEST

2. Pressing the [ENTER] key causes the following message to appear. Press and hold down the [MENU+] key or [MENU-] key, until the intended item is displayed.

REG ADJUST TEST
REG ADJ EXECUTE

3. Pressing the [ENTER] key executes the test of the item currently displayed on the panel.

<<REG ADJ RESULT is executed>>

① Color registration adjustment test is conducted. ([READY] light blinking)

② When the test ends, the test result (OK or error name) appears in the upper line of the display section, and **** RESULT, in the lower line.

OK
REG ADJ RESULT

Pressing the [MENU+] key increments the test result sequentially in the display.

Pressing the [MENU-] key decrements the test result sequentially in the display.

Pressing the [BACK] key restores the status of Item 2.

③ Pressing the [CANCEL] key while the test is under way aborts the test ([READY] light comes on) and restores the status of Item 2.

<<REG ADJ RESULT is executed>>

The same as the key operation in the execution of REG ADJ EXECUTE②.

<< BLT REFLECT TESTis executed>>

① A color drift belt reflection test is conducted. ([READY] light blinking)

② When the test ends, the test result (OK or error name) appears in the upper line of the display section, and **** RESULT, in the lower line.

OK
BLT REFLECT RSLT

Pressing the [MENU+] key increments the test result sequentially in the display.

Pressing the [MENU-] key decrements the test result sequentially in the display.

Pressing the [BACK] key restores the status of Item 3.

③ Pressing the [CANCEL] key while the test is under way aborts the test ([READY] light comes on) and restores the status of Item 3.

<<BLT REFLECT RSLT is executed>>

The same as the key operation of Item②. in the execution of BLT REFLECT TEST.

4. Repeat Items 2 and 3, as needed.
5. Press the [BACK] key to terminate the test. (Status of Item 1 restored)

Color registration adjustment test items

Display	Function
REG ADJ EXECUTE	Execution of Color registration adjustment
REG ADJ RESULT	Viewing of the Color registration adjustment result
BLT REFLECT TEST	Execution of the judgment of good or bad Color registration adjustment belt reflectivity
BLT REFLECT RSLT	Viewing of the result of judgment of good or bad Color registration adjustmentbelt reflectivity

5.3.2.7 Print density adjustment test

This self-diagnosis is practiced to conduct testing on the Print density adjustment function of the printer and to view the execution result. This test is executed also to judge whether the Print density adjustment mechanism is normal or abnormal.

1. Activate the self-diagnostic (Level 1) mode, and press and hold down the [MENU+] key or [MENU-] key, until the following message appears:

DENS ADJ TEST

2. Pressing the [ENTER] key causes the following message to appear. Press and hold down the [MENU+] key or [MENU-] key, until the intended item is displayed.

DENS ADJ TEST
DENS ADJ EXECUTE

3. Pressing the [ENTER] key executes the test of the item currently displayed on the panel.

<< DENS ADJ EXECUTE is executed>>

① A density correction test is conducted. ([READY] light blinking)

② When the test ends, the test result (OK or error name) appears in the upper line of the display section, and **** RESULT, in the lower line.

OK
DENS ADJ RESULT

Pressing the [MENU+] key increments the test result sequentially in the display.

Pressing the [MENU-] key decrements the test result sequentially in the display.

Pressing the [BACK] key restores the status of Item 2.

③ Pressing the [CANCEL] key while the test is under way aborts the test ([READY] light comes on) and restores the status of Item 2.

<<DENS ADJ RESULT is executed>>

The same as the key operation of Item ② in the execution of DENS ADJ EXECUTE.

<<DENS ADJ PAR-SET is executed>>

Indication only, without functionality.

<<AUTO CALIBRATION is executed>>

① Automatic setting of a density sensor sensitivity correction value is made. ([READY] light blinking)

② When the test ends, the test result (OK or error name) appears in the upper line of the display section, and **** RESULT, in the lower line.

OK
DENS ADJ RESULT

Pressing the [MENU+] key increments the test result sequentially in the display.

Pressing the [MENU-] key decrements the test result sequentially in the display.

Pressing the [BACK] key restores the status of Item 2.

③ Pressing the [CANCEL] key while the test is under way aborts the test ([READY] light comes on) and restores the status of Item 2.

4. Repeat Item 3, as needed.
5. Press the [BACK] key to terminate the test. (Status of Item 1 restored)

Density correction test items

Display	Function
DENS ADJ EXECUTE	Execution of Print density adjustment
DENS ADJ PAR-SET	Indication is given, without functionality.
DENS ADJ RESULT	Viewing of Print density adjustment result
AUTO CALIBRATION	Automatic setting of Print density adjustment value

5.3.2.8 Indication of consumable part counters

This self-diagnosis is practiced to indicate the consumed states of consumable parts.

1. Activate the normal self-diagnostic mode, and press and hold down the [MENU+] key or [MENU-] key, until "CONSUMABLE STATUS" appears in the display section, and then, press the ENTER key. (The MENU+ key increments a test item, and the MENU- key decrements a test item.)
2. Pressing the [MENU+] key or [MENU-] key causes the consumed states of consumable parts to be displayed sequentially. (ONLINE and CANCEL keys inactive to pressing)
3. Press the [BACK] key to terminate the test. (Status of Item 1 restored)

Display Upper	Display Lower	Format	Unit	Function
K-ID UNIT	********IMAGES	DEC	Images	The number of rotation after a new TONER ID of each color was attached. The number is converted into A4 3Page/Job.
Y-ID UNIT	********IMAGES	DEC	Images	
M-ID UNIT	********IMAGES	DEC	Images	
C-ID UNIT	********IMAGES	DEC	Images	
FUSER UNIT	********PRINTS	DEC	Prints	The number of sheets after a new FUSER unit was attached.
TR BELT UNIT	********IMAGES	DEC	Images	The number of sheets after a new BELT unit was attached.
K-TONER (FULL)	********%	DEC	%	The number of use of each color TONER.
Y-TONER (FULL)	********%	DEC	%	
M-TONER (FULL)	********%	DEC	%	
C-TONER (FULL)	********%	DEC	%	
M-WASTE TNR CNT	********TIMES	DEC	Times	The number of disposal TONER count. *Disposal TONER becomes full in more than 32times.
C-WASTE TNR CNT	********TIMES	DEC	Times	
K-STC MODE CNT	********TIMES	DEC	Times	The printing dot counts of each color TONER cartridge. (The count is NOT reset by replacing cartridge.)
Y-STC MODE CNT	********TIMES	DEC	Times	
M-STC MODE CNT	********TIMES	DEC	Times	
C-STC MODE CNT	********TIMES	DEC	Times	
K REFILL CNT	********TIMES	DEC	Times	The printing dot counts of each color TONER cartridge. (The count is reset by replacing cartridge.)
Y REFILL CNT	********TIMES	DEC	Times	
M REFILL CNT	********TIMES	DEC	Times	
C REFILL CNT	********TIMES	DEC	Times	
K OVER RIDE CNT	********TIMES	DEC	Times	The number of times that each color TONER cartridge life was extended.
Y OVER RIDE CNT	********TIMES	DEC	Times	
M OVER RIDE CNT	********TIMES	DEC	Times	
C OVER RIDE CNT	********TIMES	DEC	Times	

5.3.2.9 Indication of printed page counters

This self-diagnosis is practiced to indicate the current number of printed pages of the printer.

1. Activate the normal self-diagnostic mode, and press and hold down the [MENU+] key or [MENU-] key, until "PRINTER STATUS" appears in the display section, and then, press the ENTER key. (The MENU+ key increments a test item, and the MENU- key decrements a test item.)
2. Pressing the [MENU+] key or [MENU-] key causes the current number of printed pages to be displayed sequentially. (ONLINE and CANCEL keys inactive to pressing)
3. Press the [BACK] key to terminate the test. (Status of Item 1 restored)

Display Upper	Display Lower	Format	Unit	Function
K-IMPRESSIONS	********IMAGES	DEC	Images	The printing number of sheets of each color.
Y-IMPRESSIONS	********IMAGES	DEC	Images	
M-IMPRESSIONS	********IMAGES	DEC	Images	
C-IMPRESSIONS	********IMAGES	DEC	Images	
TOTAL SHEET CNT	********COUNTS	DEC	Prints	The indication of the total printing number of sheets

5.3.2.10 Factory/Shipping switching

This self-diagnosis is practiced to switch the PU PCB between the Factory mode and the Shipping mode.

1. Activate the self-diagnostic (Level 1) mode, and press and hold down the [MENU+] key or [MENU-] key, until the following message appears.

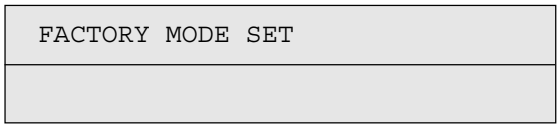

2. Pressing the [ENTER] key causes the following message to appear. Press and hold down the [MENU+] key or [MENU-], until the intended item (See the table below) is displayed.

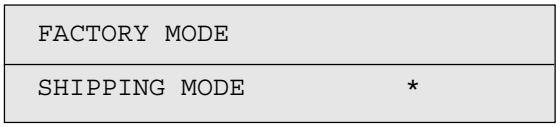

3. Pressing the [ENTER] key while the desired set item remains displayed selects the set value.
4. Pressing and holding down (3 sec) the [ENTER] key while the value you want to set remains displayed registers the currently displayed value on the EEPROM. Then, the status of Item 2 will be restored.
5. Repeat Items 2 to 4, as needed.

6. Press the [BACK] key to terminate the test. (The status of Item 1 is restored.)

Indication	Set value	Function
FACTORY MODE	FACTORY MODE	For setting the Factory Work mode (Fuse-cut disabled mode).
	SHIPPING MODE	For canceling the Factory Work mode and enabling the fuse-cut function.
FUSE INTACT Note: ****** is either INTACT or BLOWN.	BELT UNIT ******	For checking the FUSE status of the transfer belt unit.
	FUSE UNIT ******	For checking the FUSE status of the fuser unit.
	K-ID UNIT ******	For checking the FUSE status of the K-ID unit.
	Y-ID UNIT ******	For checking the FUSE status of the Y-ID unit.
	M-ID UNIT ******	For checking the FUSE status of the M-ID unit.
	C-ID UNIT ******	For checking the FUSE status of the C-ID unit.

5.3.2.11 Setup of self-diagnostic function

This self-diagnosis is practiced to Enable/Disable the error detections of the different types of sensors.
The error detections can be disabled or enabled temporarily for troubleshooting purposes. However, this function should be exercised with utmost care, since it is able to set some items that require specialized knowledge in the field of operation of the engine.
After the function has been used, the set values must always be reset to the defaults.

1. Activate the self-diagnostic (Level 1) mode, and press and hold down the [MENU+] key or [MENU-] key, until the following message appears.

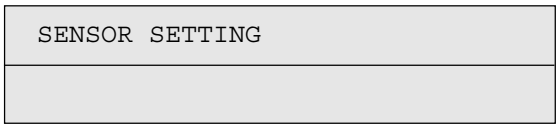

2. Pressing the [ENTER] key causes the following message to appear. Press and hold down the [MENU+] key or [MENU-], until the intended item (See the table below) is displayed.

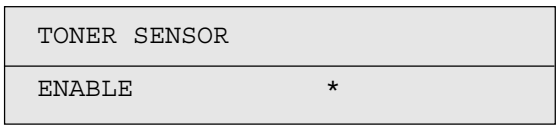

3. Pressing the [ENTER] key allows to select the set value in the lower line of the display section.

   Pressing the [MENU+] key increments the set value.

   Pressing the [MENU-] key decrements the set value.

4. Pressing and holding down (3 sec) the [ENTER] key while the value you want to set remains displayed registers that value on the EEPROM. Then, the status of Item 2 will be restored.

5. Repeat Items 2 to 4, as needed.

6. Press the [BACK] key (except for the status of Item 4.) to terminate the setup. (Status of Item 1 restored)

Indication	Set value	Operation of set value	Function
TONER SENSOR	ENABLE	Detects.	For enabling/disabling toner sensor operation.
	DISABLE	Does not detect.	
BELT UNIT CHECK	ENABLE	Checks	For enabling/disabling checking operation for mounted belt unit.
	DISABLE	Does not check.	
ID UNIT CHECK	ENABLE	Checks	For enabling/disabling checking operation for mounted ID unit.
	DISABLE	Does not check.	
REG ADJUST ERROR	ENABLE	Detect.Stops.	For enabling/disabling the stop of error issuance, based on color drift detection value.
	DISABLE	Does not stop.	
DRUM OVER LIFE	STOP	Does not extend life.	For enabling/disabling extending the drum life.
	CONTINUANCE	Extends life.	

Hatched part: Denotes the default.

Display Part Upper	Display Part lower			Range Of Selection	Initialing Value	Deteils
	Setting Method	Set Number	Set Value			
WR POINT REV	-	TBL=**H	±=*.***mm	00H~FFH	0.000mm (00H)	The correction value is added to the predetermined writing position
BOTTOM WRT POINT	-	TBL=**H	±=*.***mm	00H~FFH	00H~FFH (00H)	The amount of the form rear end cutting is set

5.3.2.12 Indication of LED head serial number

This self-diagnosis is practiced to check whether a downloaded LED head data matches the serial number of the actual LED head.

1. Activate the self-diagnostic mode, and press and hold down the [MENU+] key or [MENU-] key, until "LED HEAD DATA" appears in the upper line of the display section, and then, press the ENTER key. (The MENU+ key increments a test item, and the MENU- key decrements a test item.)
2. Pressing the [MENU+] key or [MENU-] key causes the serial numbers of the K/Y/M/C LED head data to be displayed sequentially.
3. Press the [BACK] key to terminate the test. (Status of Item 1 restored)

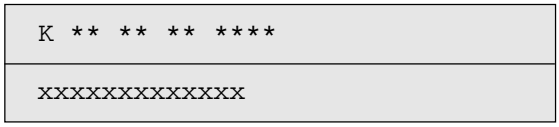

** ** ** **** : Rev No.
xxxxxxxxxxxxx : Serial No.

5.3.2.13 Details of panel indications

Display

LCD (English) (□ means no display in upper line)	Ready LED	Attention LED	Description	Level
INITIALIZING	Off	Off	The controller side is initializing.	Initializing
MENU RESETTING	Off	Off	Indicates that EEPROM of the controller side is being reset. The condition that EEPROM is reset includes the followings. •Changes of CU ROM (when disagreement of CU F/W version is detected) •Changes of destination channel •Compulsive initialization of EEPROM (System maintenance menu) •OEM set of PJL command	Initializing
RAM CHECK **********	Off	Off	RAM checking. The rate of checked capacity to the total capacity is displayed on the 2nd line.	Initializing
WAIT A MOMENT NETWORK INITIAL	Off	Off	The network is in initializing.	Initializing
FLASH CHECK	Off	Off	Displays that the content of Flash memory is being checked. It is displayed it when Resident/Option Flash memory not fomented are detected, or "Format Flash ROM" of a system maintenance menu is performed. The function mentioned above is secret to users. Therefore, this status does not occur in a user environment.	Initializing
FLASH FORMAT	Off	Off	Displays that Flash memory is being formatted. It is displayed it when Resident/Option Flash memory not fomented are detected, or "Format Flash ROM" of a system maintenance menu is performed. The function mentioned above is secret to users. Therefore, this status does not occur in a user environment.	Initializing
CHECKING FILE SYSTEM	Off	Off	Displays that HDD file system is being checked. Process Check of File System is valid to start from "FILE SYS MAINTE2"-"CHECK FILE SYS" of Admin Menu. (C6150/C6050/C5950/C5750)	Initializing
ERASING DISK nnn%	Off	Off	Indicates that the hard disk is being erased. Erase process of the hard disk is valid to start from "FILE SYS MAINTE2"-"HDD ERASE" of ADMIN MENU. nnn Percentage of erased capacity (C6150/C6050/C5950/C5750)	Initializing

LCD (English) (□ means no display in upper line)	Ready LED	Attention LED	Description	Level
CHECKING SECTORS nnn%	Off	Off	Displays that a sector of HDD is being checked. Check process of the sector is valid to start from "FILE SYS MAINTE2"-"CHK ALL SECTORS" of Admin Menu. nnn Percentage of checked capacity (C6150/C6050/ C5950/C5750)	Initializing
PROGRAM UPDATE MODE	Off	Off	Displays that a printer is a special mode to conduct the update of the program (Controller firmware) This mode starts by turning on power with pressing Online switch.	Initializing
WAIT A MOMENT DATA RECEIVE	Off	Blink	Displays that a program data to update is being received.	Initializing
WAIT A MOMENT DATA RECEIVED OK	Off	Off	Displays that a program data to update has been received.	Initializing
CHECK DATA REC DATA ERROR <%DLCODE%>	Off	On	Displays that an error takes place while a program data to update is being received. %DLCODE% 1:Size Error 2:Check SUM Error 3:Printer Model No. Error 4:Module I/F Version Error 5:FAT Version Error	Initializing
WAIT A MOMENT DATA WRITING	Off	Blink	Displays that a program data to update is being written.	Initializing
POWER OFF/ON DATA WRITTEN OK	Off	Off	Displays that a program data to update has been written.	Initializing
CHECK DATA DATA WRITE ERROR <%DLCODE%>	Off	On	Displays that an error takes place while a program data to update is being written. %DLCODE% 1:Memory alloc Error 2:Download File Error 3:Device Free space acquirement Error 4:Device Free area Shortage Error 5:File Write Error 6:CU-F/W Mismatch Error	Initializing
PU FLASH ERROR	Off	Off	It is shown that PU firmware has booted in Loader mode. It displays, when PU firmware returns "00.00.00" as a response of Leisus command"VERSIONR 01 H" (version of PU firmware main part program) which CU firmware transmits at the time of initialization. If initialization is completed, it will change to the status of Priority 251. This status may occur also in a user environment. When it occurs, the maintenance by a maintenance member is required (equivalent to S/C).	Initializing

LCD (English) (□ means no display in upper line)	Ready LED	Attention LED	Description	Level
COMMUNICATION ERROR	Off	Off	Displays that communication to PU firmware failed. This status may occur also in a user environment. When it occurs, the maintenance by a maintenance member is required (equivalent to S/C).	Initializing
STATUS MODE	Off	Off	Displays that normal Online mode starts. Data (Job) from an external portion is processed even though an error takes place after Online (ready) state once this mode starts. Displays Error or Warning on a panel. If a power supply is turned on pressing a <Enter>+<Back>+<Down> switch, it will enter into this mode. This function is secret to users. Therefore, this status does not occur in a user environment.	Initializing
ONLINE	On	Off	Shows on-line status.	Normal
OFFLINE	Off	Off	Shows off-line status. * Ready LED in off-line is always assumed to be Off.	Normal
FILE ACCESSING	Varies	Varies	The status showing FILE SYSTEM (HDD/FLASH) is being accessed.	Normal
DATA ARRIVE	Varies	Varies	Data receiving, process not started yet. Displayed mainly during PJL process without text print data or during job spooling.	Normal
PROCESSING	Blink	Varies	Data receiving or output processing	Normal
DATA	Varies	Varies	Un-printed data remains in Buffer. Waiting for data to follow.	Normal
PRINTING	Varies	Varies	A printer is printing.	Normal
PRINT DEMO PAGE	Varies	Varies	Printing Demo Pages	Normal
PRINT FONT	Varies	Varies	Printing Font Lists (C6150/C6050/C5950/C5750)	Normal
PRINT MENU MAP	Varies	Varies	Printing Menu Maps	Normal
PRINT FILE LIST	Varies	Varies	Printing File Lists (C6150/C6050/C5950/C5750)	Normal
PRINT ERROR LOG	Varies	Varies	Printing Error Logs (C6150/C6050/C5950/C5750)	Normal
PRINT NETWORK CONFIG	Varies	Varies	It is shown that a network setup is printing. If "Print Summary", "Print Information" of each slot are chosen by menu "Print Information"-"Network", printing of a network setup will be started.	Normal
□ COLLATE COPY iii/jjj	Varies	Varies	Collate printing. iii: The number of copy in printing. jjj: the total number of printing. When the total number of printing is 1, it is a normal printing display.	Normal

LCD (English) (□ means no display in upper line)	Ready LED	Attention LED	Description	Level
□ COPY kkk/lll	Varies	Varies	Copy printing. kkk: The number of pages in printing. lll: The total number of printing. When the number of copy is 1, it is a normal printing display.	Normal
VERIFYING JOB	Blink	Varies	Indicates that the integrity of print data for encrypted authentication is being verified (for corruption and tampering). (C6150/C6050/C5950/C5750)	Normal
CANCELING JOB	Blink	Varies	Indicates that job cancellation has been instructed and data is being ignored until the job completion.	Normal
CANCELING JOB (JAM)	Blink	Varies	Indicates if JAM occurs when Jam Recover is OFF, that job cancellation has been instructed and data is being ignored until the job completion.	Normal
CANCELING JOB	Blink	Varies	Indicates a job being cancelled due to no print permit. (Related to JobAccount) 1. A job received from a user who is denied printing. 2. A color job received from a user who is denied color printing.	Normal
CANCELING JOB (BUFFER FULL)	Blink	Varies	Indicates that a job is being cancelled because the printer area where the logs are stored has been used up and also "Cancel job" is specified as an operation at the time of Log Full. (Related to JobAccount)	Normal
C M Y K ▮ ▮ ▬ ▬	ON	Varies	Displays toner gauges. Remaining toner levels are as follows: 100-60%: ▮, 50-40%: ■, 30-10%: ▬ “Toner Low” indication: ▬	Normal
□ ADJUSTING TEMP	Varies	Varies	Warming up.	Normal
□ OPTIMIZING TEMP	Varies	Varies	Indicates that printing has been suspended for a while due to high temperature of the drum, or the printer is in a wait state to cope with heat at the time of switching narrow paper to wide paper.	Normal
□ POWER SAVE	Varies	Varies	A printer is in power save mode. Displayed in a combination of other message in the first line. LCD back light extincts in the energy saving mode and blinks after that mode. If the power is on during the energy saving mode, it lights up and extincts after 30 seconds. However, the energy saming mode remains. Also, it lights up in the priority 365 in shut down process.	Normal
□ ADJUSTING COLOR	Varies	Varies	Executing Auto Color Adjusting	Normal
□ ADJUSTING DENSITY	Varies	Varies	Executing Auto Density Adjustment.	Normal

LCD (English) (□ means no display in upper line)	Ready LED	Attention LED	Description	Level
PU DOWNLOADING	Varies	Varies	Downloading PU F/W (This is not user-level error) This function is secret to users. Therefore, this status does not occur in a user environment.	Normal
□ ORDER %COLOR% TONER	Varies	On (Blink) (Off)	Toner amount is low. Displayed in a combination of other message in the first line. In case of MENU LOW TONER=STOP, ATTENTION LED blinks and the printer shifts to OFF Line. When an ONLINE switch is pushed, or when arbitrary errors occur and the error is canceled, an off-line state is canceled, and printing is continued until it is set to Toner Empty. Arbitrary errors are errors of Priority 301-361. "TONER LOW" status occurs when the power is on, the LED of ATTENTION in a case of "LOWER TONER=STOP is blinked and go back to the off line after the initializing process. It is possible to operate untill "TONER EMPTY" by pressing "ONLINE switch". Moreover, when set as "NearLifeLED = Disable", Attention LED is switched off. %COLOR% Y M C K	Warning
□ %COLOR% WASTE TONER FULL. REPLACE TONER	Varies	On	This warning is displayed at Cover Open/Close or Power OFF/ON after a waste-toner full error (Priority: 321.8) occurs. (Not occur for Black.) Displayed in a combination of other message in the first line. As long as this warning is being displayed, a waste toner full error occurs , the printer shifts to Offline and stops each time it has printed about 50 copies. %COLOR% Y M C	Warning
□ NON OEM %COLOR% TONER DETECTED	Varies	On	Indicates the toner cartridge is not for use in the printer. %COLOR% Y M C K	Warning
□ %COLOR% TONER REGIONAL MISMATCH	Varies	On	Indicates the toner cartridge is not for use in the printer. %COLOR% Y M C K	Warning

LCD (English) (□ means no display in upper line)	Ready LED	Attention LED	Description	Level
□ NON GENUINE %COLOR% TONER	Varies	On	Indicates the toner cartridge is not for use in the printer. %COLOR% Y M C K	Warning
□ PS3 EMUL ERROR	Blink	Varies	Interpreter detects an error due to the following reason. Receive data after this is ignored until the job completion. When the job is completely received, this is automatically cleared. - The job has a grammatical error. - The page is complicated, and VM was used up. (C6150/C6050/C5950/C5750)	Warning
□ ORDER %COLOR% IMAGE DRUM	Varies	On (Off)	The life of the drum (warning). Displayed in a combination of other message in the first line. The printer stops at the point when it reaches the drum life (Shifts to error, OFF-LINE.) Moreover, when set as "NearLifeLED = Disable", Attention LED is switched off. Y M C K	Warning
□ ORDER FUSER	Varies	On (Off)	Notifies the fuser unit is near its life. Moreover, when set as "NearLifeLED = Disable", Attention LED is switched off.	Warning
□ ORDER BELT	Varies	On (Off)	Notifies the belt unit is near its life. This is a warning; thus, printing will not stop. Moreover, when set as "NearLifeLED = Disable", Attention LED is switched off.	Warning
□ FUSER LIFE	Varies	On	Notifies the life of the fuser unit (warning). Displayed in a combination of other message in the first line. Warning only (No Life error). This appears when the cover was opened and closed just after the fuser life error occurred.	Warning
□ BELT LIFE	Varies	On	Notifies the life of the belt unit (warning). Displayed in a combination of other message in the first line. Warning only (No Life error). This appears when the cover was opened and closed just after the belt life error occurred.	Warning

LCD (English) (□ means no display in upper line)	Ready LED	Attention LED	Description	Level
□ %COLOR% TONER EMPTY	Varies	On	Notifies the toner is empty. This is a warning only. This appears when the cover was opened and closed just after the toner empty error occurred. Y M C K	Warning
□ %COLOR% TONER NOT INSTALLED	Varies	On	Notifies the toner cartridge is not installed. This is a warning only. Y M C K	Warning
□ %COLOR% DRUM LIFE	Varies	On	Notifies the life of the drum. This is a warning only. This appears when the cover was opened and closed just after the drum life error occurred. Y M C K	Warning
□ BELT REFLEX ERROR	Varies	On	Belt Reflex Check Error. PU firmware does not notify this warning to CU firmware at the time of Shipping Mode. Therefore, this status does not occur in a user environment.	Warning
□ DENSITY SHUTTER ERROR2	Varies	Varies	Density Adjustment Shutter Error 2.Error that does not occur at user level.Displayed only in FactoryMode. PU firmware does not notify this warning to CU firmware at the time of Shipping Mode. Therefore, this status does not occur in a user environment.	Warning
□ DENSITY SHUTTER ERROR1	Varies	Varies	Density Adjustment Shutter Error 1.Error that does not occur at user level.Displayed only in FactoryMode. PU firmware does not notify this warning to CU firmware at the time of Shipping Mode. Therefore, this status does not occur in a user environment.	Warning
□ DENSITY COLOR CALIBRATION ERROR	Varies	Varies	Density Adjustment Color Calibration Error.Error that does not occur at user level.Displayed only in FactoryMode. PU firmware does not notify this warning to CU firmware at the time of Shipping Mode. Therefore, this status does not occur in a user environment.	Warning
□ DENSITY COLOR SENSOR ERROR	Varies	Varies	Density Adjustment Color Sensor Error.Error that does not occur at user level.Displayed only in FactoryMode. PU firmware does not notify this warning to CU firmware at the time of Shipping Mode. Therefore, this status does not occur in a user environment.	Warning

LCD (English) (□ means no display in upper line)	Ready LED	Attention LED	Description	Level
□ DENSITY BLACK CALIBRATION ERROR	Varies	Varies	Density Adjustment Black Calibration Error.Error that does not occur at user level.Displayed only in FactoryMode. PU firmware does not notify this warning to CU firmware at the time of Shipping Mode. Therefore, this status does not occur in a user environment.	Warning
□ DENSITY BLACK SENSOR ERROR	Varies	Varies	Density Adjustment Black Sensor Error.Error that does not occur at user level.Displayed only in FactoryMode. PU firmware does not notify this warning to CU firmware at the time of Shipping Mode. Therefore, this status does not occur in a user environment.	Warning
SENSOR CALIBRATION ERROR	Varies	On	Sensor calibration error This error does not occur in the user's environment because the PU firmware does not notify the CU firmware of this status detected in Shipping Mode.	Warning
□ %COLOR% IMAGE DRUM SMEAR ERROR	Varies	Varies	Density Adjustment ID ERROR 2; smear due to ID failure. PU firmware does not notify this warning to CU firmware at the time of Shipping Mode. Therefore, this status does not occur in a user environment. Y M C K	Warning
□ %COLOR% LOW DENSITY ERROR	Varies	Varies	Density Adjustment ID ERROR; LED out of focus is assumed. PU firmware does not notify this warning to CU firmware at the time of Shipping Mode. Therefore, this status does not occur in a user environment. Y M C K	Warning
□ SENSOR CALIBRATION ERROR	Varies	On	When output of color registration sensor is below reference value. PU firmware does not notify this warning to CU firmware at the time of Shipping Mode. Therefore, this status does not occur in a user environment.	Warning
□ REGISTRATION ERROR n	Varies	On	When a color registration error is detected with coarse adjustment, or with the main-scan line adjustment. PU firmware does not notify this warning to CU firmware at the time of Shipping Mode. Therefore, this status does not occur in a user environment. n 2 = Yellow 3 = Magenta 4 = Cyan 5 =	Warning

LCD (English) (□ means no display in upper line)	Ready LED	Attention LED	Description	Level
□ REGISTRATION SENSOR ERROR n	Varies	On	When a color registration error is detected with the fine control of registration adjustment, or with the sub-scan line adjustment. PU firmware does not notify this warning to CU firmware at the time of Shipping Mode. Therefore, this status does not occur in a user environment. n 2 = Yellow 3 = Magenta 4 = Cyan 5 =	Warning
□ %COLOR% HEAD DATA ERROR	Varies	On	The LED head calibration data is missing or invalid. Printing can be proceeded without calibrating light radiation. PU firmware does not notify this warning to CU firmware at the time of Shipping Mode. Therefore, this status does not occur in a user environment. Y M C K	Warning
□ %TRAY% EMPTY	Varies	On	%TRAY%: The tray is empty. Treated as Warning until printing to the empty tray is designated. Tray1 Tray2	Warning
□ HARD DISK FULL	Varies	On	Disk-full is occurring. Because this is a temporary warning, it remains until the end of the job and disappears.	Warning
□ DISK WRITE DISABLED	Varies	On	An attempt to write in a read-only file was done. Because this is a temporary warning, it remains until the end of the job and disappears. (C6150/C6050/C5950/C5750)	Warning
PRESS ONLINE SW COLLATE FAIL	Varies	Varies	Memory overflow was occurred in the collate copy. Stays displayed until the ONLINE key is pressed.	Warning
PRESS ONLINE SW JOB LOG. DISK FULL	Varies	On	Indicates that the free space of the storage device is too small to execute PRINT STATISTICS SYSTEM. (C6150/C6050/C5950/C5750)	Warning
PRESS ONLINE SW COLOR RESTRICTED.MONO PRINTED	Varies	On	Notifies the user that his job was printed in Mono because he did not have Color Print Permission. (JobAccount related). This display remains until ONLINE key is pressed.	Warning
PRESS ONLINE SW COLOR RESTRICTED.JOB REJECTED	Varies	On	Notifies the user that his print job was cancelled because he did not have the Color Print Permission. (JobAccount related). This display remains until ONLINE key is pressed.	Warning
PRESS ONLINE SW PRINT RESTRICTED.JOB REJECTED	Varies	On	Notifies the user that his job was cancelled because he did not have the Print Permission. (JobAccount related). This display remains until ONLINE key is pressed.	Warning

LCD (English) (□ means no display in upper line)	Ready LED	Attention LED	Description	Level
PRESS ONLINE SW LOG BUFFER FULL. JOB REJECTED	Varies	On	Notifies users that jobs have been cancelled because the buffer is full. (Related to JobAccount.)Stays displayed until the ON LINE key is pressed.	Warning
□ FILE ERASING	Varies	On	Indicates that a secret file is being erased. (C6150/C6050/C5950/C5750)	Warning
□ DELETING ENCRYPTED JOB	Varies	On	It indicares the deletion of encrypted authentication print job and saving of deletion request of file. (C6150/C6050/C5950/C5750)	Warning
□ ERASED DATA FULL	Varies	On	ndicates that a secret file waiting to be erased is full. (C6150/C6050/C5950/C5750)	Warning
PRESS ONLINE SW EXPIRED SECURE JOB	Varies	On	Indicates that an applicable job has been automatically deleted as the retention period for authentication printing has expired. (C6150/C6050/C5950/C5750)	Warning
PRESS ONLINE SW DISK USE FAILED nnn	Varies	On	A disk error is occurred, which is other than the file system fill or the disk write protected. Operation that does not involve a disk is available. nnn: An identifier to Error type (For details, see the overview chapter.) %FS_ERR% =0…GENERAL ERROR =1…VOLUME NOT AVAILABLE =3…FILE NOT FOUND =4…NO FREE FILE DESCRIPTORS =5…INVALID NUMBER OF BYTES =6…FILE ALREADY EXISTS =7…ILLEGAL NAME =8…CANT DEL ROOT =9…NOT FILE =10…NOT DIRECTORY =11…NOT SAME VOLUME =12…READ ONLY =13…ROOT DIR FULL =14…DIR NOT EMPTY =15…BAD DISK =16…NO LABEL =17…INVALID PARAMETER =18…NO CONTIG SPACE =19…CANT CHANGE ROOT =20…FD OBSOLETE =21…DELETED =22…NO BLOCK DEVICE =23…BAD SEEK =24…NTERNAL ERROR =25…WRITE ONLY	Warning
PRESS ONLINE SW INVALID SECURE DATA	Varies	Varies	Indicates that a job has been deleted because corruption of data has been detected by the integrity verification in authentication printing. (C6150/C6050/C5950/C5750)	Warning

LCD (English) (□ means no display in upper line)	Ready LED	Attention LED	Description	Level
PRESS ONLINE SW INVALID DATA	Varies	Varies	Invalid data was received. Press the On-line switch and eliminate the warning. Displayed when unsupported PDL command is received or a spool command is received without HDD. (C6150/C6050/C5950/C5750)	Warning
PRESS ONLINE SW INVALID DATA OR TIMEOUT	Varies	Varies	Invalid data was received. Press the On-line switch and eliminate the warning. Displayed when unsupported PDL command is received or a spool command is received without HDD. (C5850/C5650)	Warning
LOAD %MEDIA_SIZE% IN MP TRAY AND PRESS ONLINE SWITCH	On	Off	Manual paper feed is required. Manually insert the paper shown by %MEDIA_SIZE%. The unit of paper size in Custom: The unit specified for MPTray (menu setting) is used if no unit is specified by the driver. When the driver specifies a unit, the unit is used for display. Paper size displays in Custom mode: "<width>x<length><unit>" ex.) 210x297mm 8.5x11.0inch The unit of paper size in Custom: The unit specified for MPTray (menu setting) is used if no unit is specified by the driver. When the driver specifies a unit, the unit is used for display.	Warning

5.3.3 Various types of print on the individual printer equipped with controller

Menu Map Printing

Information on the program versions, controller configuration, network settings, etc., is printed.

Operation:

1 Press the MENU+ key several times to cause “INFORMATION MENU” to be displayed.

2 Press the ENTER key to cause “PRINT MENUMAP/EXECUTE” to be displayed.

3 Press the ENTER key.

Or, press and hold down for two seconds or longer the push switch above the network connector on the back of the printer main unit.

Demonstration print

The demonstration patterns for different destinations that are built in the ROM are printed.

Operation:

1 Press the MENU+ key several times to cause “INFORMATION MENU” to be displayed.

2 Press the ENTER key.

3 Press the MENU+ key several times to cause “DEMO1/EXECUTE” to be displayed.

4 Press the ENTER key.

5.3.4 Functions of keys when depressed at power-on

The different keys provide the following functions when the power is turned on to the printer. The following keys turn effective when pressed and held down, until "RAM CHECK" is displayed in the upper line of the LCD, and three to four asterisks "*" in the lower line.

(1) MENU+ key & MENU- key & ENTER key

These keys start the printer in the CU program update mode. When the printer is started in this mode, the network does not work, since the DLM function turns ineffective.

(2) BACK key & ONLINE key & CANCEL key

These keys launch the CU program without activating the objects which were added in the download mode, etc.

(3) MENU+ key & MENU- key

These keys launch the system maintenance menu.

(4) BACK key & MENU key & ENTER key

These keys start the printer in the mode in which it remains permanently ONLINE, in disregard of warnings/errors (Factory-support function).

(5) ONLINE key

This key starts the printer in the dedicated mode in which objects, such as network, USB, etc., are downloaded.

(6) ENTER key

This key launches the Admin menu.

5.4 Setup after replacement of parts

This subsection describes the necessary adjustments to be made when parts have been replaced.

Replaced Part	Adjustment
LED Head	Not necessary
Image Drum Cartridge (Y, M, C, K)	Not necessary
Fuser Unit	Not necessary
Belt Unit	Not necessary
PU PCB	Necessary to copy EEPROM information. Utility required.
GDI CU PCB	Necessary to copy EEPROM information. Utility required.
PDL CU PCB	Necessary to change EEPROM. Remove ROM from old PCB and attach it to new PCB.

5.4.1 Precautions on the replacement of engine control PCB

1. When EEPROM of the PCB to be removed is accessible

   (When SERVICE CALL 105 [Engine EEPROM Error] is not displayed)

   (1) Read the EEPROM information from the PCB to be removed by using the PU PCB replacement function (Subsection 2.4.1.1.1 PU PCB replacement function in the Maintenance Utility Operation Manual), and save it provisionally on the HDD of the PC.

   (2) Copy the EEPROM information saved on the HDD to the EEPROM of the PCB to be newly installed, by using the PU PCB replacement function (Subsection 2.4.1.1.1 PU PCB replacement function in the Maintenance Utility Operation Manual).

   Note! To download and write the EEPROM information by the maintenance utility, access the EEPROM after placing the printer in the "Forced ONLINE mode" by the procedure described below. Notice that, if the printer has an error currently issued, the error is also displayed in the Forced ONLINE mode.

   1. When turning on the printer, press and hold down the [BACK]+[MENU]+[ENTER] keys, until "STATUS MODE" is displayed on the operator panel.
   2. Thereafter, the "ONLINE" indication will appear if the printer is in normal condition. If the printer has an error, it will be displayed. However, the printer is in ONLINE status internally and, therefore, ready to hold communication.

2. When EEPROM of the PCB to be removed is inaccessible

   If the PCB to be removed causes SERVICE CALL 105 (Engine EEPROM Error) to be displayed on the operator panel, or the EEPROM data cannot be downloaded, first replace it with a new PCB, and then, work by the following procedure using the maintenance utility:

   (1) Setup of PU Serial Number

   (Subsection 2.4.1.2 Setup of PU PCB of the Maintenance Utility Operation Manual)

   The printer has a SAP Serial Number applied. The 12-digit SAP Serial Number is marked in the top line of the serial number label, and is made up of two digits for production base, two digits for manufacturing year and month, six digits for serial No. (Sequence No.), and two digits for Revision.

   - The PU Serial Number is a 10-digit number excluding the two digits for Revision from the 12-digit SAP Serial Number.
   - The number should be set on the "Subsection 2.4.1.1.2.1 PU Serial Number setup" screen in "Subsection 2.4.1.1.2 PU PCB setup function" of the maintenance utility.
   - Set in the “2.4.1.1.2 PU serial number setting” screen of “2.4.1.1.2.1 PU PCB setting” of the maintenance utility.

- To specify a PU Serial Number, enter a 11-digit number prefixed with "0" (single-byte zero). (Notice that, when the PU Serial Number is read, it is a 10-digit number.)
  On the "PU Serial Number setup" screen, enter the 11-digit number resulting from prefixing a single-byte zero to the 10-digit number which is obtained by excluding the two digits for Revision, shown in the image diagram below, from the serial number on the "PU Serial Number setup" screen.

  [Other than for OEL]

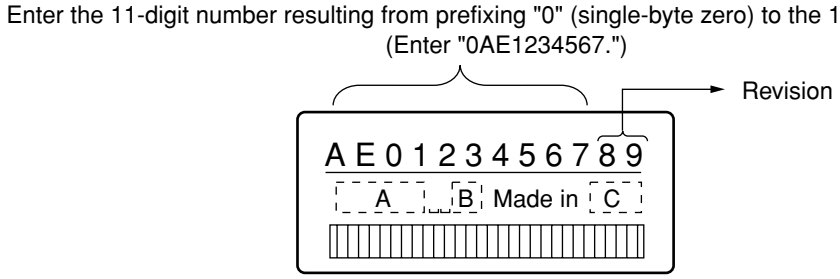

Figure of Serial No. label image

[For OEL]

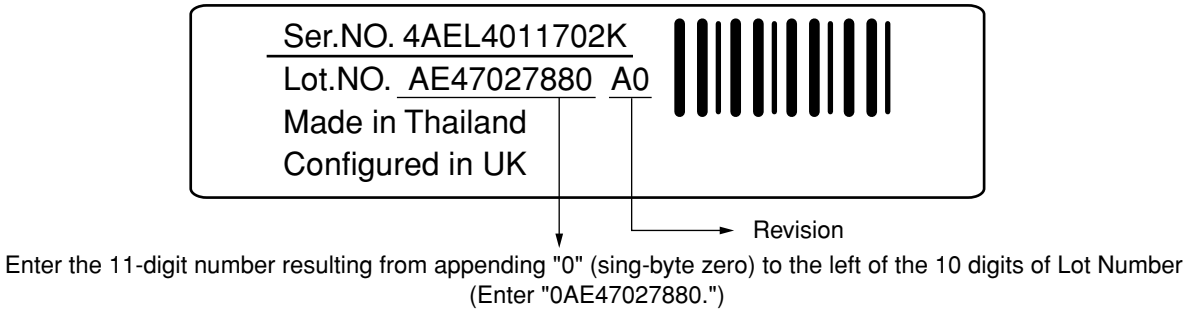

Figure of Serial No. label image (labeled in UK Factory)

- The PU Serial Number is output in the Printer Serial Number field of the Menu Map header section. For this reason, check of PU seriel Number is performed by printing Menu Map.
- In the case of the OEL destination, the PU Serial Number is output, as a Lot Number, in the Lot Number field in the bottom line of the Menu Map header section after the configuration at the UK Plant. [See 1. (2) of Subsection 5.4.2.]

(2) Switching to Shipping mode

When the engine control PCB has been replaced with a new one, the printer still is in the Factory Work mode. Switch it to the Shipping mode.

- Make the switching on the "Subsection 2.4.1.1.2.2 Factory/Shipping mode" screen in "Subsection 2.4.1.1.2 PU PCB setup function" of the maintenance utility.

Note! When the EEPROM (engine control PCB) has been replaced, the service life information of the belt, toner, IDs, etc., is necessarily cleared. Therefore, be aware that the service life management is likely to suffer errors until the next time units are replaced. The counts that are cleared when the EEPROM is replaced are those indicated below. Since the counts, except for Total Sheets Fed, are cleared when the respective units are replaced, the errors will be resolved at that point in time.

Item	Description	Count Description
Fuser unit	Fuser unit life count	Number of printed pages since the installation of a new fuser unit, converted into a number of A4-size sheets.
Belt unit	Belt unit life count	Number of printed pages since the installation of a new belt unit, converted into a number of A4-size sheets.
ID unit - Black ID unit - Yellow ID unit - Magenta ID unit - Cyan	Respective life counts of image drum units	Number of revolutions since the installation of a new ID unit, converted into a number of A4-size sheets.
Toner - Black Toner - Yellow Toner - Magenta Toner - Cyan	Respective counts of toner amounts used	Print dot number count
Total number of sheets fed	Printer life count	Total number of sheets fed
Pages - Black Pages - Yellow Pages - Magenta Pages - Cyan	Respective numbers of pages impressed (images) with image drums	Numbers of pages impressed (images) from installation of new image drum units.

5.4.2 Setup of EEPROM after replacement of CU PCB

When the CU PCB is replaced, it is necessary for the new replacement PCB to take over the user-settings that the user has been using to that point, as well as the font install information. For this, copy the EEPROM by the Maintenance Utility, and set up the CU Serial No. However, if SERVICE CALL 40 is issued and the old EEPROM cannot be used, use the new PCB, and set the CU Serial No.(See Subsection 5.4.2.2) and check the setup of destination (See Subsection 5.4.3). Meanwhile, in the case of the PDL CU PCB, the EEPROM can be swapped directly between a new PCB and an old one. In this case, the CU Serial No. setup and destination setup are not required.

5.4.2.1 Replacement of EEPROM after replacement of PDL CU PCB (C6150/C6050/C5950/C5750)

The EEPROM of the PDL CU PCB is installed in the IC socket. Replace the EEPROM in the following manner:

1. Remove the EEPROM and MAC address sticker label attached to the new PCB.
2. Insert a flat-tipped screwdriver in between the EEPROM of the old PCB and the IC socket, and take out the EEPROM, seeing to it that the leads of the EEPROM are not bent.
3. Install the EEPROM in the new PCB. In this operation, make sure that the silk print of the EEPROM and that of the PCB match in the same direction.
4. Remove the MAC address sticker label of the old PCB, and paste it to the new PCB.

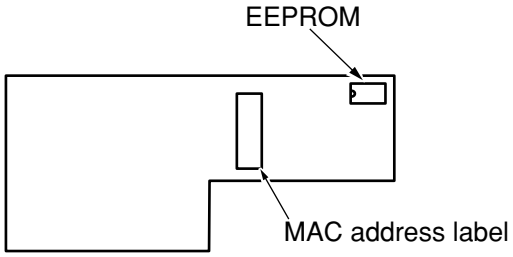

5.4.2.2 Setup of CU Serial Number

The printer has a SAP Serial Number applied. The 12-digit SAP Serial Number is marked in the top line of the serial number label, and is made up of two digits for production base, two digits for manufacturing year and month, six digits for serial No. (Sequence No.), and two digits for Revision.

(1) For destinations other than OEL

CU serial number setting is unnecessary.

(2) For OEL destination

- For CU Serial Number, a unique Serial Number within 12 digits is assigned at the UK Plant.
- Notice that, when the CU Serial Number is set, the menu settings inside the CU are reset (restored to the default settings). (See the Maintenance Utility Operation Manual.)
- On "Subsection 2.4.1.1.4.3 Serial Number information setup screen" of "Subsection 2.4.1.1.4 CU PCB setup function" of the maintenance utility, set"Select Printer Serial Number" to "CU Serial Number" and [Display Mode], to "Show Both".

- To specify the CU Serial Number, enter a number within 12 digits (Notice that, when the CU Serial Number is read, it is also a number within 12 digits.)

Figure of Serial No. label image (labeled in UK Factory)

- The CU Serial Number is output in the Printer Serial Number field of the Menu Map header section. Therefore, after the CU Serial Number has been rewritten, it can be checked by conducting the Menu Map print.
- The PU Serial Number is output in the Lot Number field in the bottom line of the Menu Map header section.

5.4.3 Setup of destination

[Checking method: Menu Map Print (C6150/C6050/C5950/C5850/C5750/ C5650)]

Always set the destination prior to shipping out a printer or maintenance PCB, since the default setting is OEL.

Note! This setting is stored on the EEPROM of the CU PCB.

1. Setup on the operation panel: Start the printer in the maintenance mode, and set the destination.
   - Turn on the power with the MENU+ and MENU- key held down.
   - "Maintenance Menu" will be displayed briefly, which will change to "OKIUSER".
   - Press the MENU+ key to select the destination setting "OKIUSER" and press the ENTER key.
   - "OEL" will appear in the lower line of the LCD.
   - Press the ENTER key, select the destination by operating the MENU+ or MENU- key, and press the ENTER key.
   - Press the BACK key to define the setting. "JP1"
   - Press the BACK key twice, or the ONLINE key once. This will cause the printer to restart with the destination modified.

2. Explanation

   Program ROM is used in common for domestic and overseas markets.

   This setting is stored on the EEPROM of the CU PCB.

   When the version number of the program ROM is changed, the setting will be reset to the default value.

   Make this setup when there is no destination set up or the version number of the program has been changed.

5.5 About the manual setup of Print density adjustment

The printer is shipped out of the factory with its automatic density correction mode set to "Auto". However, if that mode is changed to "Manual" by the user, the density setting may be displaced with the use along the time. Execute this manual setup when the density appears below par.

Note! Make the setup when the printer remains at a standstill. Do not conduct it during warming-up.

(1) Press the MENU+ or MENU- key several times, and when [COLOR MENU] is displayed, press the ENTER key.

(2) Press the MENU+ or MENU- key to cause [DENSITY ADJUSTMENT/ RESET] to be displayed.

(3) Press the ENTER key.

Automatic Print density adjustment will start.

6. PERIODICAL MAINTENANCE

6.1 Recommended replacement parts

Oki Data recommends that heavy users only replace the following parts. (If those parts are not replaced, the print quality is not guaranteed, and malfunctions may even result.)

Part Name	C6150/C6050/C5950/C5750	C5850/C5650
Friction Pad Assy	42088801	<--
Roller Assy. Hopping	43334901	<--

Note! 1. Consumable parts (Image drums, toner cartridge, fuser unit, belt unit) are not included.
2. Power supply, PU PCB, CU PCB and other PCBs are not included.

Parts are replaced periodically by users.

6.2 Cleaning

Clean the interior and outside of the printer, as needed, using a waste cloth and small vacuum cleaner (hand cleaner).
Note! Be careful not to touch the image drum terminals, LED lens array and LED head connectors.

6.3 Cleaning of LED lens array

If a vertical white band or white stripe (partial print, light print) is observed in the print face, clean the LED lens array.

Note! To clean the LED lens array, be sure to use the LED head cleaner.
(The LED head cleaner is supplied in the same package of the toner cartridge.)

White band, white stripe
(Void or light printing)

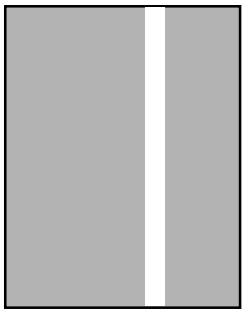

CLEANING THE LED HEAD

Execute this cleaning if an output shows a light fuzzy print or white stripes, or characters are blurred.

(1) Turn OFF the power of the printer.

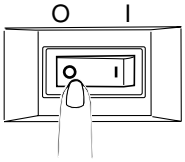

(2) Open the top cover by pressing the OPEN button.

⚠Caution	Personal injuries may occur.	

The fuser unit is extremely hot. Do not touch it.

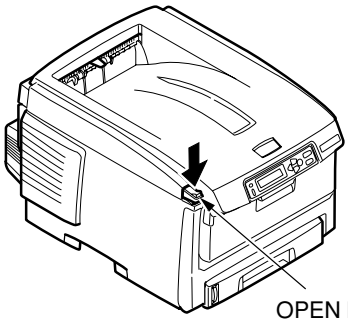

(3) Wipe lightly the four lens surfaces of the LED head with the LED lens cleaner or a soft tissue paper.

Note! Do not use methyl alcohol, paint thinner or any other solvent, since they damage the LED head.

Memo The LED head cleaner is supplied in the same package of the replacement toner cartridge

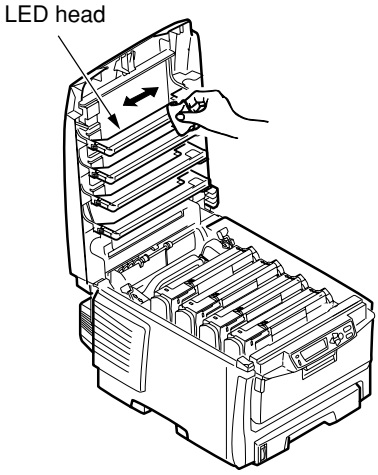

(4) Close the top cover.

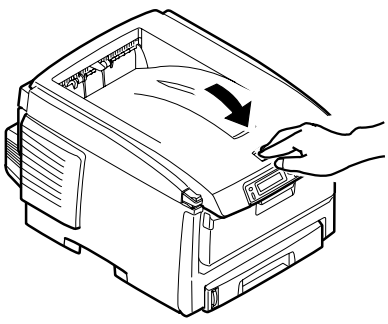

6.4 Cleaning of pickup rollers

If vertical stripes are observed in the print face, clean the pickup rollers.

Note! For cleaning, use a soft piece of cloth to avoid scratching the roller surface.

CLEANING THE FEED ROLLERS AND PAD

Execute this cleaning if [391 Paper Jam] is issued frequently.

(1) Draw out the paper cassette.

(2) Wipe the feed rollers (large) and feed rollers (small) using a piece of cloth impregnated with water and squeezed hard, or the LED lens cleaner.

Note! An LED lens cleaner is enclosed in an optional replacement toner cartridge.

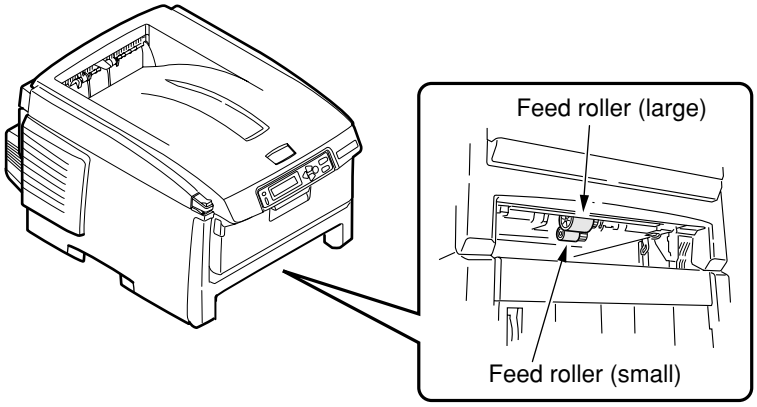

(3) Wipe the pad of the paper cassette using a piece of cloth impregnated with water and squeezed hard, or the LED lens cleaner.

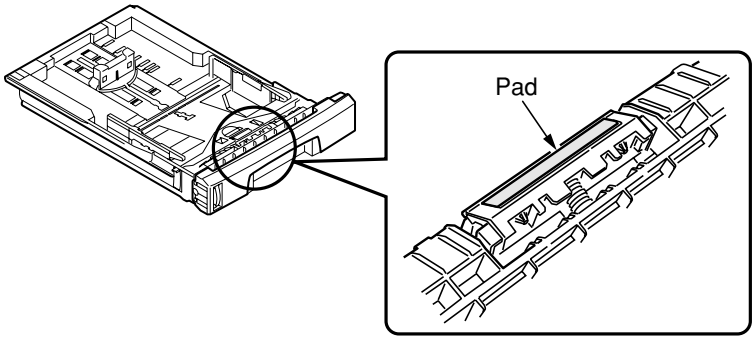

Note! •Clean the Second Tray (optional) in the same manner, if [392 Paper Jam] recurs frequently.

•Clean the feed rollers of the multi-purpose tray in the same manner, if [390: Check MP Tray] is issued frequently.

6.5 Internal cleaning of printer

Cleaning the interior of the printer.

Depending on the print pattern, toner may adhere to the metal shaft located between the fuser unit and the cyan image drum cartridge. Execute this cleaning if the metal shaft has an adherence of toner.

(1) Turn OFF the power of the printer.

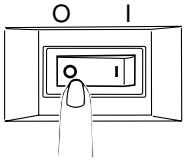

(2) Open the top cover by pressing the OPEN button.

⚠Caution	Personal injuries may occur.	

The fuser unit is extremely hot. Do not touch it.

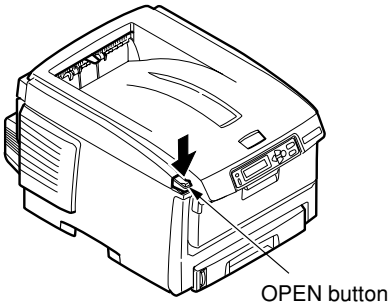

(3) Take out the image drum cartridges

1. Take out the four image drum cartridges and place them on a flat-top table.
2. After taking out the image drum cartridges, cover them with a black sheet of paper.

Note! • The image drums (green tubular parts) are extremely vulnerable. Use good caution in handling them.

• Do not expose the image drum cartridges to direct sun or intense light (over approximately 1500 luxes). Even under the inside lighting, do not leave them exposed for five minutes or longer.

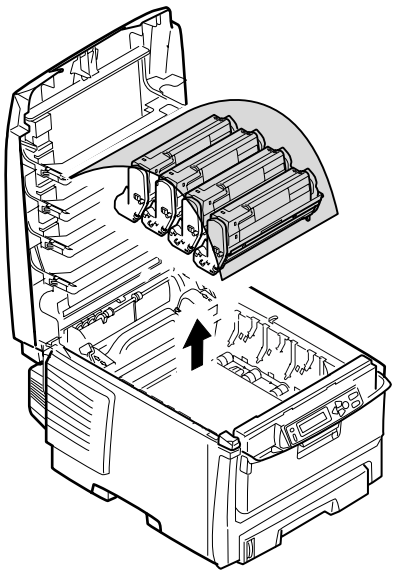

(4) Take out the fuser unit.

⚠Caution	Personal injuries may occur.	

The fuser unit is extremely hot. Be careful not to touch it. If the fuser unit is hot, do not try yourself to clear paper but wait until the fuser unit becomes cool.

1. Raise the fuser unit lock levers (2, blue) in the direction of the arrow.
2. Take out the fuser unit holding it by the handle.

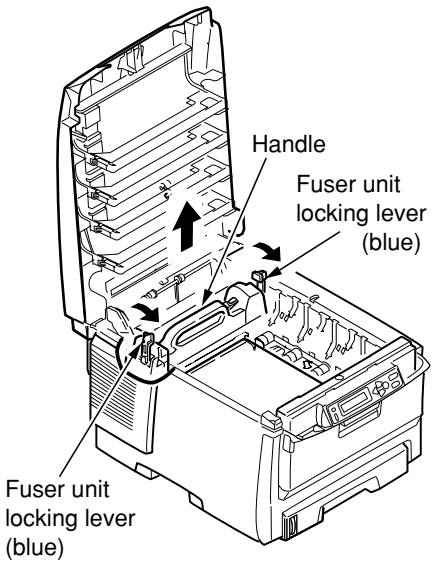

(5) Wipe the metal shaft using the LED lens cleaner, a soft cloth or tissue paper.

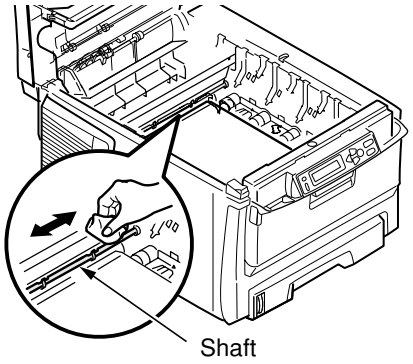

(6) Install the fuser unit back in place.
For details, see "Replacing the fuser unit" in Setup Part of the User's Manual.
(7) Put the four image drum cartridges gently back in the printer.
(8) Close the top cover.

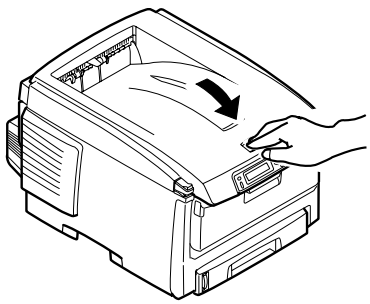

7. TROUBLESHOOTING PROCEDURES

7.1 Precautions prior to repair

(1) Confirm the basic check items indicated in the User's Manual.

(2) Through hearing from the user, obtain information, as far in detail as possible, on the situation concerning the fault.

(3) Inspect the printer in a condition close to the actual situation in which the fault occurred.

7.2 Items to be checked prior to taking action on abnormal images

(1) Check to see if the printer is operated in an adequate environment.

(2) Check to see if the consumables (toner, drum cartridges) are replaced properly.

(3) Check to see if the right paper is used. See the paper specifications.

(4) Check to see if the drum cartridges are installed properly.

7.3 Precautions when taking action on abnormal images

(1) Do not bring your hand or any object in contact with the surface of the OPC drum.

(2) Do not expose the OPC drum to direct sun.

(3) Do not touch the fuser unit, which can be very hot.

(4) Do not expose the image drums to light for over five minutes at the room temperature.

7.4 Preparations for troubleshooting

(1) Indications on the operator panel

A fault status of this printer is displayed in the LCD (liquid-crystal display) of the operator panel.

Conduct fault repair properly in accordance with the message displayed in the LCD.

7.5 Troubleshooting method

If a trouble occurs in the printer, search for it by the following procedure:

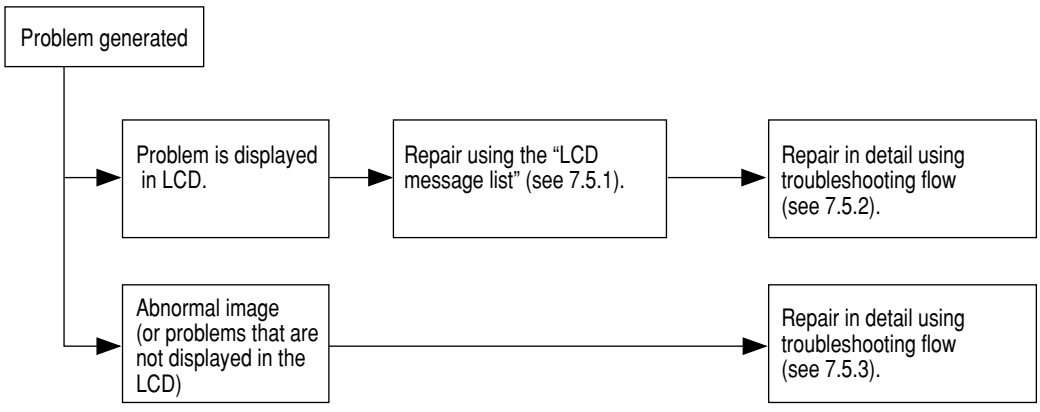

7.5.1 LCD Message List

When the printer detects an irrecoverable error, it displays a service call error in the LCD like the one given below:

Service call
nnn: error
Note! "nnn" is an error code.

When a service call error is issued, an error code is displayed in the lower line of the LCD, accompanied by the relevant error information. Be sure to make a note of this error information (numeric values representing an address, etc.) and communicate it to the related departments, since such information will be required for the subsequent trouble analysis/solution. The error codes and their meanings, as well as the related remedial methods, are given in Table 7-1-1.

Table 7-1-1 Operator Alarm (1/9)

Display on Operator Panel	Ready LED	Attention LED	Description	Code nnn
LOAD %MEDIA_SIZE%/ %MEDIA_TYPE% AND PRESS ONLINE SWITCH %ERRCODE%:%TRAY% MEDIA MISMATCH	Off	Blink	The media type in the tray and the print data do not match. Load mmmmmmm/pppppp paper in ttttt tray (It takes a while until the status disappears after you have closed the tray and the lever lifted.) (ttttt:TrayName,mmmmmm:PaperName.pppppp:MediaTypeName) ~~Error 661 : Tray1~~ ~~Error 662 : Ttay2~~ Error 461 : Tray1 Error 462 : Ttay2 Paper size displays in Custom mode: "<width>x<length><unit>" ex.) 210x297MM 8.5x11.0INCH The unit of paper size in Custom: The unit specified for MPTray (menu setting) is used if no unit is specified by the driver. When the driver specifies a unit, the unit is used for display. As a user pressed ONLINE key, the printer could ignore this error at the just printing job.	Error 461 462
LOAD %MEDIA_SIZE%/ %MEDIA_TYPE% AND PRESS ONLINE SWITCH %ERRCODE%:%TRAY% MEDIA MISMATCH	Off	Blink	The media type in the tray and the print data do not match. Load paper in tray (It takes a while until the status disappears after you have closed the tray and the lever lifted.) (%TRAY%TrayName,%MEDIA_SIZE%: PaperName.%MEDIA_TYPE%:MediaTypeName) ~~Error 660 : MPTray~~ Error 460 : MPTray Paper size displays in Custom mode: "<width>x<length><unit>" ex.) 210x297MM 8.5x11.0INCH The unit of paper size in Custom: The unit specified for MPTray (menu setting) is used if no unit is specified by the driver. When the driver specifies a unit, the unit is used for display. A user needs to press ONLINE key after changing the paper.	Error 460

Table 7-1-1 Operator Alarm (2/9)

Display on Operator Panel	Ready LED	Attention LED	Description	Code nnn
LOAD %MEDIA_SIZE%/ %MEDIA_TYPE% AND PRESS ONLINE SWITCH %ERRCODE%:%TRAY% SIZE MISMATCH	Off	Blink	The size of paper or media type in the tray does not match the print data. Load paper in tray (It takes a while until the status disappears after you have closed the tray and the lever lifted.) Error 461 : Tray1 Error 462 : Ttay2 The paper size displaying form of the custom mode is the same as above. As a user pressed ONLINE key, the printer could ignore this error at the just printing job.	Error 461 462
LOAD %MEDIA_SIZE%/ %MEDIA_TYPE% AND PRESS ONLINE SWITCH %ERRCODE%:%TRAY% SIZE MISMATCH	Off	Blink	The size of paper or media type in the tray does not match the print data. Load paper in tray (It takes a while until the status disappears after you have closed the tray and the lever lifted.) Error 460 : MPTray The paper size displaying form of the custom mode is the same as above. A user needs to press ONLINE key after changing the paper.	Error 460
DOWNLOAD MESSAGE PROCESSING	Varies	Varies	Indicates that message data to be updated is being processed.	Error
DOWNLOAD MESSAGE WRITING	Varies	Varies	Indicates that message data to be updated is being written.	Error
DOWNLOAD MESSAGE SUCCESS	Varies	Varies	Indicates that message data to be updated has been written successfully.	Error
DOWNLOAD MESSAGE FAILED %CODE%	Varies	Varies	Indicates that writing of message data to be uploaded has been failed. %CODE% is a decimal value (one digit) and represents the cause of failure in writing. = 1 ··· Unknown: Cause of failure unknown = 2 ··· DATA_ERROR: Hash check error in data reading/ writing, or abnormal FLASH = 3 ··· OVERFLOW: Downloading failure due to FLASH memory full at starting or during writing in a language file = 4 ··· MEMORYFULL: Memory reservation failure = 5 ··· UNSUPPORTED_DATA: Downloading data unsupported on the printer	Error
NETWORK CONFIG WRITING	Varies	Varies	This appears during the NIC configuration data is storing into the flash memory, as the setting was changed.	Error
WAIT A MOMENT NETWORK INITIAL	Varies	Varies	This appears when the NIC initialization is occurred, as the setting was changed.	Error

Table 7-1-1 Operator Alarm (3/9)

Display on Operator Panel	Ready LED	Attention LED	Description	Code nnn
LOAD %MEDIA_SIZE% %ERRCODE%:%TRAY% EMPTY	Off	Blink	Printing request is issued to an empty tray. Load paper. (It takes a while until the status disappears after you have closed the tray and the lever lifted.) Error 491 : Tray1 Error 492 : Tray2 The paper size displaying form of the custom mode is the same as above.	Error 491 492
LOAD %MEDIA_SIZE% AND PRESS ONLINE SWITCH %ERRCODE%:MP TRAY EMPTY	Off	Blink	Printing request is issued to an empty MPTray. If it goes through a definite period of time (PU firmware holds time(3 sec)) after a user places paper, a printer will lift up the multipurpose tray, and will perform re-feeding. If a user pushes the ONLINE button before timeout, the printer perform also re-feeding,. Error 490 : MPTray Programmer's note: When the ONLINE button was pressed, the controller (CU) should send MPTPECLR command to the engine (PU). The engine would clear this state after receiving that command. This error is occurred, when the MPTray is in the home position and the sensor "PE SNS2" cannot detect papers.	Error 490
INSTALL PAPER CASSETTE %ERRCODE%:TRAY1 OPEN	Off	Blink	Indicates removal of the paper cassette of Tray 1 that is a paper path in attempting to print from Tray 2.	Error 440
INSTALL PAPER CASSETTE %ERRCODE%:%TRAY% MISSING	Off	Blink	Indicates that paper feed is unavailable in attempting to print from Tray 1 due to removal of the paper cassette of Tray 1. (Occurs only when Tray 2 has been installed.)	Error 430
ADD MORE MEMORY %ERRCODE%:MEMORY OVERFLOW	Off	Blink	Memory capacity overflows due to the following reason. Press ON-LINE switch so that it continues. Install expansion RAM or decrease the data amount. - Too much print data in a page. - Too much Macro data. - Too much DLL data. - After frame buffer compression, over flow occurred.	Error 420
PROTEC PAPER %ERRCODE%:ERROR	Off	Blink	This error occurs if a received job does not meet the security level designated by a printer administrator. A printing operator is not using the printer driver that is specified by a security manager of the printer. Displays a warning on the operation panel as waiting for key press. Does not print the job that is being processed. (The same operation as job reset) (C6150/C6050/ C5950/C5750)	Error 421

Table 7-1-1 Operator Alarm (4/9)

Display on Operator Panel	Ready LED	Attention LED	Description	Code nnn
PROTEC PAPER %ERRCODE%:ERROR	Off	Blink	Density of the destination image for a woven pattern is greater than that of the woven pattern. A user must take measures such as increasing density of the woven pattern or decreasing density of the input image. Displays a warning on the operation panel as waiting for key press. Does not print the job that is being processed. (The same operation as job reset) (C6150/C6050/C5950/C5750)	Error 422
TRUST PAPER %ERRCODE%:ERROR	Off	Blink	This error occurs when capacity of specified information to be embedded exceeds the capacity that can be embedded in the woven pattern. A printing operator must reduce data to be embedded in the woven pattern. Displays a warning on the operation panel as waiting for key press. Does not print the job that is being processed. (The same operation as job reset) (C6150/C6050/C5950/C5750)	Error 423
TRUST PAPER %ERRCODE%:ERROR	Off	Blink	Density of the destination image for woven pattern is greater than that of the woven pattern. A user must take measures such as increasing density of the woven pattern or decreasing density of the input image. Displays a warning on the operation panel as waiting for key press. Does not print the job that is being processed. (The same operation as job reset) (C6150/C6050/C5950/C5750)	Error 424
TRUST PAPER %ERRCODE%:ERROR	Off	Blink	The area specified for tampering verification is incorrect. This error occurs when an image is pushed away or the unprintable area is specified. (C6150/C6050/C5950/C5750)	Error 425
PROTEC PAPER %ERRCODE%:ERROR	Off	Blink	Size of information to be embedded is greater than paper size. It is required to reduce information to be embedded or increase print paper size to make prints. (C6150/C6050/C5950/C5750)	Error 426
PROTEC PAPER %ERRCODE%:ERROR	Off	Blink	NTP server setting is not correct. Print JOB is canceled because it judged that the correct time is impossible to enter. Users need to change the setting of NT server. (C6150/C6050/C5950/C5750)	Error 427
REPLACE TONER %ERRCODE%:%COLOR% WASTE TONER FULL	Off	Blink	Indicates that a waste toner box represented by %COLOR% has become full and needs to be replaced. Error 414 : Y Error 415 : M Error 416 : C (Does not occur for K.) Warning status takes effect at Cover Open/Close and printing of about 50 copies becomes available.	Error 414 415 416
REPLACE TONER %ERRCODE%:%COLOR% TONER EMPTY	Off	Blink	Toner ends. Error 410 : Y Error 411 : M Error 412 : C Error 413 : K Warning status takes effect at Cover Open/Close.	Error 410 411 412 413

Table 7-1-1 Operator Alarm (5/9)

Display on Operator Panel	Ready LED	Attention LED	Description	Code nnn
REPLACE TONER %ERRCODE%:%COLOR% TONER REGIONAL MISMATCH	Off	Blink	Indicates the toner cartridge is not for use in the printer. The printer recovers from the error after replacement of the toner cartridge with a toner cartridge for the printer. Error 554 : Y Error 555 : M Error 556 : C Error 557 : K	Error 554 555 556 557
REPLACE TONER %ERRCODE%:INCOMPATIBLE %COLOR% TONER	Off	Blink	Indicates the toner cartridge is not for use in the printer. The printer recovers from the error after replacement of the toner cartridge with a toner cartridge for the printer. Error 614 : Y Error 615 : M Error 616 : C Error 617 : K	Error 614 615 616 617
REPLACE TONER %ERRCODE%:INCOMPATIBLE %COLOR% TONER	Off	Blink	Indicates the toner cartridge is not for use in the printer. The printer recovers from the error after replacement of the toner cartridge with a toner cartridge for the printer. Error 620 : Y Error 621 : M Error 622 : C Error 623 : K	Error 620 621 622 623
GENUINE TONER IS RECOMMENDED %ERRCODE%:NON GENUINE %COLOR% TONER	Off	Blink	Indicates the toner cartridge is not for use in the printer. The printer recovers from the error after replacement of the toner cartridge with a toner cartridge for the printer. Error 550 : Y Error 551 : M Error 552 : C Error 553 : K	Error 550 551 552 553
NSTALL TONER %ERRCODE%:%COLOR% TONER MISSING	Off	Blink	The toner cartridge is not installed. Error 610 : Y Error 611 : M Error 612 : C Error 613 : K	Error 610 611 612 613
CHECK TONER CARTRIDGE %ERRCODE%:%COLOR% TONER SENSOR ERROR	Off	Blink	Something is wrong with the toner sensor. This status is indicated in Shipping Mode only. If the same error is detected in FACTORY Mode, it is indicated as service call of 163. Error 540 : Y Error 541 : M Error 542 : C Error 543 : K	Error 540 541 542 543
OPEN FRONT COVER %ERRCODE%:PAPER SIZE ERROR	Off	Blink	Inappropriate size paper was fed from a tray. Check the paper in the tray or check for Multiple-feed. Open and close the cover to perform recovery printing, and continue.	Error 400
CHECK MP TRAY %ERRCODE%:PAPER JAM	Off	Blink	Paper jam occurred during paper feeding from tray. Error 390 : MP Tray	Error 390

Table 7-1-1 Operator Alarm (6/9)

Display on Operator Panel	Ready LED	Attention LED	Description	Code nnn
OPEN FRONT COVER %ERRCODE%:PAPER JAM	Off	Blink	Paper jam occurred during paper feeding from tray. Error 391 : Tray1 Error 392 : Tray2	Error 391 392
OPEN FRONT COVER %ERRCODE%:PAPER JAM	Off	Blink	Jam has occurred in paper path. Error 380 : Feed	Error 380
OPEN TOP COVER %ERRCODE%:PAPER JAM	Off	Blink	Jam has occurred in paper path. Error 381 : Transport Error 382 : Exit Error 383 : Duplex Entry Error 385 : Around Fuser Unit Error 389 : Printing Page Lost	Error 381 382 383 385 389
OPEN DUPLEX COVER %ERRCODE%:PAPER JAM	Off	Blink	Jam has occurred nearby DUPLEX unit. Error 370 : Duplex Reversal Error 371 : Duplex Input Error 373 : Multifeed into Duplex (Duplex Remain Jam)	Error 370 371 373
OPEN FRONT COVER %ERRCODE%:PAPER JAM	Off	Blink	Jam has occurred nearby DUPLEX unit. Error 372 : Misfeed from Duplex	Error 372
INSTALL DUPLEX UNIT %ERRCODE%:DUPLEX UNIT OPEN	Off	Blink	Duplex unit is open (removed). When this error is detected, printing stops.	Error 360
REPLACE IMAGE DRUM %ERRCODE%:%COLOR% DRUM LIFE	Off	Blink	The life of the image drum (Alarm) Error 350 : Y Error 351 : M Error 352 : C Error 353 : K Warning status takes effect at Cover Open/Close.	Error 350 351 352 353
REPLACE IMAGE DRUM %ERRCODE%:%COLOR% DRUM LIFE	Off	Blink	The toner empty error is occurred after the image drum reached its life. Error 560 : Y Error 561 : M Error 562 : C Error 563 : K This is displayed until a user exchanges the image drum.	Error 560 561 562 563
REPLACE FUSER %ERRCODE%:FUSER LIFE	Off	Blink	Notifies the fuser has reached its life. This is the error displayed based on the counter to indicate that the fuser has reached its life, and printing will stop. Warning status takes effect at Cover Open/Close. This error will occur on some user setting mode.	Error 354
REPLACE BELT %ERRCODE%:BELT LIFE	Off	Blink	Notifies the transfer belt has reached its life. This is the error displayed based on the counter to indicate that the belt has reached its life, and printing will stop. Warning status takes effect at Cover Open/Close.	Error 355
REPLACE BELT %ERRCODE%:BELT LIFE	Off	Blink	Indicates waste toner full. Warning status takes effect only once at Cover Open/Close, and the error occurs again when about 500 copies have been printed.	Error 356

Table 7-1-1 Operator Alarm (7/9)

Display on Operator Panel	Ready LED	Attention LED	Description	Code nnn
CHECK TONER CARTRIDGE %ERRCODE%:%COLOR% IMPROPER LOCK LEVER POSITION	Off	Blink	Shows that the toner cartridge lever has not been locked. Error 544 : Y Error 545 : M Error 546 : C Error 547 : K	Error 544 545 546 547
CHECK IMAGE DRUM %ERRCODE%:%COLOR% DRUM MISSING	Off	Blink	The image drum is not correctly installed. Error 340 : Y Error 341 : M Error 342 : C	Error 340 341 342
CHECK IMAGE DRUM & BELT LOCK %ERRCODE%:K DRUM MISSING	Off	Blink	Indicates that the belt is unlocked or the black image drum is not set properly.	Error 343
CHECK FUSER %ERRCODE%:FUSER MISSING	Off	Blink	The fuser unit is not correctly installed. (This error is likely issued when the printer is cool at 0 deg.C or lower. Turn on the power again after the printer has warmed up.)	Error 320
CHECK BELT %ERRCODE%:BELT MISSING	Off	Blink	The belt unit is not correctly installed.	Error 330
POWER OFF AND WAIT FOR A WHILE %ERRCODE%:MOTOR OVERHEAT	Off	Blink	Motor Driver IC overheat is detected.	Error 321
CLOSE COVER %ERRCODE%:COVER OPEN	Off	Blink	The cover is open. Error 310 : Top Cover Error 311 : Front Cover	Error 310 311
CLOSE COVER %ERRCODE%:DUPLEX COVER OPEN	Off	Blink	The cover is open. Error 316 : Duplex Unit	Error 316
WAIT A MOMENT DATA RECEIVE	Off	Blink	The printer is receiving the download data.	Error
WAIT A MOMENT DATA RECEIVED OK	Off	Off	The printer finished receiving the download data.	Error
CHECK DATA REC DATA ERROR <%DLCODE%>	Off	On	An error has happened while the printer is receive-processing the download data. %DLCODE% 1: File size error 2: Check-sum error 3: Invalid printer model number 4: Invalid module I/F version 5: Invalid FAT version	Error
WAIT A MOMENT DATA WRITING	Off	Blink	The printer is writing the download data.	Error
POWER OFF/ON DATA WRITTEN OK	Off	Off	The printer finished writing the download data.	Error

Table 7-1-1 Operator Alarm (8/9)

Display on Operator Panel	Ready LED	Attention LED	Description	Code nnn
CHECK DATA DATA WRITE ERROR <%DLCODE%>	Off	On	An error has happened while the printer is writing the download data. %DLCODE% 1: Memory allocation error 2: Download file error 3: Device allocation error 4: No device space 5: File writing failure 6: CU-F/W mismatch	Error
POWER OFF/ON %ERRCODE%:NETWORK ERROR	Off	Blink	A network error is occurring.	Error 300
REBOOTING %CODE%	Off	On	Rebooting of the controller unit. %CODE% is a decimal value (one digit) and represents the reason to reboot. = 0 Reboot due to a reason other than the followings. = 1 ··· Reboot due to PJLCommand. = 2 ··· Reboot in accordance with a menu change. = 3 ··· Reboot due to quit operator of PostScript Language. = 4 ··· reboot by Network Utility (including Web).	Error
SHUTTING DOWN	Off	Off	It is shown that a printer is shutting down. Shutdown processing is started with which press ~~SHUTDOWN/RESTART button 4 seconds or more after the completion of initialization processing of a printer.~~	Error
SHUTDOWN	Off	Off	Indicates that the printer has completed shutting down.	Error
PLEASE POW OFF SHUTDOWN COMP	Off	Off	It is shown that the printer completed shutdown processing. (The backlight of LCD puts out the light) ~~Printer will be restarted if a SHUTDOWN/RESTART button is pressed.~~	Error
POWER OFF AND WAIT FOR A WHILE %ERRCODE%:CONDENSING ERROR	Off	Blink	A dew is formed. *Fatal Error is not available in national language.	Fatal 126
POWER OFF/ON %ERRCODE%:FATAL ERROR	Off	Blink	A fatal error occurred. For more information, see attached 'Fatal Errors List'. *Fatal Error is not available in national language.	Fatal <nnn>
SERVICE CALL %ERRCODE%:FATAL ERROR	Off	Blink	A fatal error occurred. For more information, see "Service Calls List." *Fatal Error is not available in national language.	Fatal <nnn>
SERVICE CALL %ERRCODE%:FATAL ERROR *	Off	Blink	A fatal error occurred. '*' specifies the detailed error cause. *Fatal Error is not available in national language.	Fatal 096 231 128 168 169

Table 7-1-1 Operator Alarm (9/9)

Display on Operator Panel	Ready LED	Attention LED	Description	Code nnn
POWER OFF/ON %ERRCODE%:FATAL_ERROR nnnnnnnn nnnnnnnn nnnnnnnn	Off	Blink	A fatal error occurred. For more information, see "Service Calls List." 'nnnnnnnn' specifies the detailed error cause. *Fatal Error is not available in national language.	Fatal 002 ~ 011 F0C F0D FFE FFF
POWER OFF/ON %ERRCODE%:DOWNLOAD ERROR	Off	Blink	Downloading Media Table to PU has failed. (Related to CustomMediaType.) *Fatal Error is not available in national language.	Fatal 209

Table 7-1-2 Service Call Error (1/7)

Message	Cause	Error Description		Solution
Service call 001:Error(C5950)	Machine Check Exception Hardware fault detected. (Board defectiveness or Shortage of power supply volume)			Replace PDL CU PCB.
Power off/on 002:Error ~ 005:Error 006:Error(C5950) 007:Error(C5950)	CPU Exception	Is the error issued again?	Yes	If RAM DIMM is installed, remove it, and turn the power off and on again. Replace the CU PCB. Install the RAM DIMM again. Replace the RAM DIMM.
service 020:Error	CU ROM Hash Check Error	Does error display reappear?	Yes	Power OFF/ON Replace CU PCB.
Service call 025:Error(C5950)	CU Font ROM Hash Check Error	A font ROM hash check error was detected. (On printers for domestic market only)	Yes	Power OFF/ON Replace PDL CU PCB.
Service call 030:Error	CU RAM Check Error	Does error display reappear?	Yes	Power OFF/ON Replace CU PCB.
Service call 031:Error	CU Optional RAM Check Error	Is RAM DIMM set properly? Is error recovered by replacing RAM DIMM?	No Yes No	Reset RAM DIMM. Replace RAM DIMM. Replace CU PCB.
Service call 036:Error(C5950)	RAM Spec Error Unsupported DIMM specification of the CU RAM	Is a genuine RAM DIMM in use? Is the RAM DIMM installed properly? Is the fault recovered when the RAM DIMM is replaced?	No No Yes No	Use genuine RAM DIMM. Reset RAM DIMM. Replace RAM DIMM. Replace PDL CU PCB
Service call 040:Error	CU EEPROM Error	Does error display reappear?	Yes	Power OFF/ON Replace PDL CU PCB
Service call 041:Error (C5850)	CU Flash Error Flash ROM Error on the CU PCB.	Does error display reappear?	Yes	Power OFF/ON Replace CU PCB

Table 7-1-2 Service Call Error (2/7)

Message	Cause	Error Description		Solution
Service call 042:Error ~ 043:Error 045:Error	Flash File System Error	Access to the Flash ROM directly mounted on the CU PCB failed.		Flash File System Error Access to the Flash ROM directly mounted on the CU PCB failed. Conduct forced initialization of the Flash (Notice that NIC-F/W will also be erased. It needs to be written with the Maintenance Utility after the initialization.) Execute FLASH FORMAT of MAINTENANCE MENU of the System Maintenance Menu. When "FLASH FORMAT" is displayed, release the key and wait till "ONLINE" (approx. 2 min.). If the symptom does not change, replace the CU PCB.
Power off/on 052:Error(C5950)	DMA Abort Error detected in Image processor.	Does error reoccur?	Yes	Power OFF/ON. Replace PDL CU PCB.
Power off/on 070:Error(C5950)	PSE firmware fault detected.	Does error reoccur?	Yes	Power OFF/ON. Replace PDL CU PCB.
Power off/on 072:Error xx	Engine I/F Error I/F error between PU-CU.	Is CU assembly set properly? Is error recovered by replacing CU PCB?	No Yes No	Set properly. Replace GDI CU PCB. Replace PU PCB
Power off/on 073:Error xxxxxxxx	Video Error. A trouble was detected during image data development. (Illegal data received)	[On the C5850] Is the CU Assy installed properly? Is the error issued again?	 No Yes Yes	 Redo the installation properly.Change the PC for another of higher grade, or execute print again after reducing the resolution. Replace the GDI CU PCB.
		[On the C5950] Is the CU Assy installed properly?	No Yes	Redo the installation properly.Replace the PDL CU PCB.
		[Common]		Reinstall or replace the optional RAM DIMM. Replace the interface cable.Redo the installation of the PC printer driver.
Power off/on 074:Error xxxxxxxx 075:Error xxxxxxxx	Video Error Fault detected when image data is extended.	Is CU assembly set properly?	No Yes	Set properly. Replace CU PCB
Service call 081: ERROR	Parameterconsistency check error	EEPROM or FLASH has become incapable of reading or writing.		Replace the CU PCB if the problem remains after cycling the power.

Table 7-1-2 Service Call Error (3/7)

Message	Cause	Error Description		Solution
Service call 104:Error	Engine EEPROM setting check is OK when power ON. Then detect read/ write error.	Does error reoccur?	Yes	Power OFF/ON Replace PU PCB(PRN)
Service call 105:Error	An error detected by checking, at printer's power-om, EEPROM installation.	Does error reoccur?	Yes	Power OFF/ON Replace PU PCB (PRN)
Service call 106:Error	Abnormal engine control logic.	Does error reoccur?	Yes	Power OFF/ON Replace PU PCB (PRN)
Service call 111:Error	Detected illegal Duplex Unit.	Is Duplex Unit of C5300/C5100 installed?	Yes	Install Duplex Unit of C5400/C5200.
Service call 112:Error	Detected illegal 2nd Tray.	Is 2nd Tray of C5300/C5100 installed?	Yes	Install 2nd Tray of C5400/ C5200.
Service call 120: ERROR	PU unit FAN motor error	1) Is the FAN in the PU unit working? 2) Does the same error occur after replacement of the FAN motor?	NO YES YES	Replace the FAN motor. Replace the PU board (PRX). Replace the PU board (PRX).
Service call 121:Error	High-voltage power supply I/F error.	Is cable between PU board and high-voltage power unit connected properly? Is there no improperly connections?	No Yes No	Connect properly. Check improper connections for high-voltage. Replace high-voltage power supply.
Service call 122:Error	Low-voltage power supply fan error. Low-voltage power supply temperature error.	Is fan in low-voltage power supply unit operating? Is fan connector connected properly?	No Yes No Yes	Check connections for connector of fan. Replace low-voltage power supply. Replace fan motor. Replace low-voltage power supply.
Service call 123:Error	Abnormal environment humidty /Not connected humidity sensor.	Does error reoccur?	Yes	Power OFF/ON Replace the operator panel PCB (PRP)
Service call 124:Error	Abnormal environment temperature.	Does error reoccur?	Yes	Power OFF/ON Replace the operator panel PCB(PRN)
Service call 126:Error	Condensation in the printer was detected.	Condensation iss likely to occur in printers carried from the outside. Turn on the printer again after it is exposed to room temperature for two hours to half a day. Does the error reoccur?	Yes	Turn on the printer again after it is left alone. Replace the operator panel PCB (PRP)
Service call 127:Error	Error detected at the fuser unit cooling fan.	Is fan connector connected properly? Does error reoccur?	No Yes No	Connect properly again. Replace fan motor Replace PU PCB (PRN)

Table 7-1-2 Service Call Error (4/7)

Message	Cause	Error Description		Solution
Service call 131:Error ~ 134:Error	LED head fault detected. (131 = Y, 132 = M, 133 = C, 134 = K)	Is FFC connected to HEAD and CU board correctly?	Yes	Check for any wire breakage or peel-off of the covering along the cord
			No	Redo the connection prolerly.
		Is there any wire breakage or peel-off of the covering along the cord?	Yes	Replace the FFC.
			No	Check the LED head fuse on CU board.
		Is the LED head fuse blown out?	Yes	Check the LED head fuse on CU board.
			No	Replace the CU board.
				Replace the LED head unit.
Service call 142:Error	Error detected at ID position of Up/ Down(142 = C)	Is ID unit set properly?	Yes	Reset ID unit.
			No	Turn power ON again.
		Does error reoccur?	Yes	Replace ID Up/Down sensor.
Service call 150:Error ~ 153:Error	ID unit fuse cannot be disconnected. (150 = Y, 151 = M, 152 = C, 153 = K)	Is ID unit setting proper?	No	Reset ID unit.
			Yes	Turn power ON again.
		Does error reoccur?	Yes	After check connections of cable between Toner sensor PCB and PU PCB, replaceToner sensor PCB.
		Is error recovered by replacing PRT board?	No	Replace PU PCB
Service call 154:Error	Belt unit fuse cannot be disconnected.	Is belt unit setting proper?	No	Reset belt unit.
			Yes	Turn power ON again.
		Does error reoccur?	Yes	Check cable connections and, replace PU PCB
Service call 155:Error	Fuser unit fuse cannot be disconnected.	Is fuser unit set properly?	No	After cleaning for fuser connector, reset.
			Yes	Turn power ON again.
		Does error reoccur?	Yes	Check cable connections and replace PU PCB
Service call 160:Error ~ 163:Error	Error detected by toner sensor. (160 = Y, 161 = M, 162 = C, 163 = K) It does not occure in factory default setting.	Is toner cartridge setting?	No	Set toner cartridge.
		Is toner lock lever setting?	No	Turn a lock lever of toner to a fixed position.
		Does error reoccur?	Yes	Replace toner sensor or assembly.
Service call 167:Error	Thermistor Slope Error	Is an error message indicated?	Yes	Turn on the power again.
		Is the error issued again?	Yes	Leave the printer as is for 30 minutes, and turn on the power again.
Service call 168:Error	Compensation Thermistor Error	Is an error message indicated?	Yes	Turn on the power again.
		Is the error issued again?	Yes	Leave the printer as is for 30 minutes, and turn on the power again. note)

Table 7-1-2 Service Call Error (5/7)

Message	Cause	Error Description		Solution
Service call 169:Error	Upper Side Thermistor Error	Is an error message indicated? Is the error issued again?	Yes Yes	Turn on the power again. Leave the printer as is for 30 minutes, and turn on the power again.
Service call 170:Error 171:Error	Short circuit in fuser thermistor or open detected.	Does error reoccur?	Yes	Turn power ON again. Replace fuser unit. note)
Service call 172:Error 173:Error	Abnormal temperature detected by fuser thermistor (high-temp or low temp.)	Does error reoccur?	Yes	Turn power ON again. Replace fuser unit.
Service call 174:Error	Short circuit in back up roller thermistor detected (at high temperature).	Does error reoccur?	Yes	Turn power ON again. Replace fuser unit.
Service call 175:Error	Open of back up roller thermistor detected (at low temperature).	Does error reoccur?	Yes	Turn power ON again. Replace fuser unit. note)
Service call 176:Error 177:Error	Abnormal (high) temperature of back up roller thermistor detected.	Does error reoccur?	Yes	Turn power ON again. Replace fuser unit.
Service call 181:Error 182:Error	Option unit I/F error. (181 = Duplex Unit, 182 = Option Tray)	Does error reoccur?	Yes	Turn power ON again. After checking connection parts of connector, replace option unit.
Power off/on 190:Error	System Memory Overflow.	Does error reoccur?	Yes	Turn power ON again. Add option RAM DIMM.
Service call 200:Error ~ 202:Error	PU Firmware download Error.	Error occurered while writing over the PU firmware.		Turn the printer OFF/ON, and retry to download the PU firmware again. (Usually, the procedure (PU firmware download) which isn't done, so this is not occur.)
Power off/on 209:Download Error	Media Table download Error.	Downloading Media Table to PU has failure.(Related to Custom Media Type)		Turn the printer OFF/ON, and retry to download the PU firmware, again. (Usually, the procedure isn't done, so this is not occur.)
Power off/on 203:Error 204:Error 207:Error 208:Error 214:Error F0C:Error F0D:Error(C5950) FFF:Error	An error was detected of the CU program. (203~214 is not occure in usual operating.)	Reinstall the CU PCB. Is the error message displayed again?		After turn power OFF, check connections between CU PCB and PU PCB. Then turn power ON again.

Table 7-1-2 Service Call Error (6/7)

Message	Cause	Error Description		Solution
Service call 220:Error (C5950)	False setting of a record medium detected by a print statistics.	Take off the HDD or replaced?	Yes	Reset original HDD.
Service call 230:Error	RFID Reader not Installed	RFID read device error Is the error issued again?	Yes Yes	Check the connection of the RFID R/W board. Replace the RFID R/W board. Replace the PU PCB.
Service call 231:Error	RFID Reader I/F Error	An interface error was detected with the RFID reader device. 01: communication error between the RFID reader and the engine PCB. 02: the transceiver circuit error of the RFID reader. 03: communication error between the RFID reader and the toner cartridge. 04: the toner cartridge detection error (more than 4).		01: Same as Error 230 02: Replace RFID R/W board. 03: Check the antenna cable connection. 04: Check to see if the quantity of toner cartridge is correct.
Service call 241:Error	Duplex Unit Program Memory Error	Does error reoccur?	Yes	Replace the DUPLEX PCB
Service call 242:Error	Option Tray2 Program Memory Error	Does error reoccur?	Yes	Replace the 2nd TRAY PCB
Service call 250:Error (C5950)	Secure File Erasing Error	An erasing error of an encrypted file was detected. Did the user agree to execute HDD ERASE?		Notify the user that Disk ERASE needs to be executed to erase the encrypted file, so that the HDD is restored to the original state as at the time of purchase. ADMIN MENU HDD ERASE
Service call 251:Error (C5950)	Secure Disk Erasing Error	An error was detected during Disk ERASE. Can the error indication be reproduced?	 Yes	Turn the power off and on again. Replace the HDD.
Power off/on 901:Error 902:Error	Short or open in belt thermistor detected.	Is belt thermistor cable setting proper? Does error reoccur?	No Yes Yes	Connect cable set properly again. Turn power ON again. Replace belt thermistor.

Table 7-1-2 Service Call Error (7/7)

Message	Cause	Error Description		Solution
Power off/on 903:Error 904:Error	Abnormal temperature detected by belt thermistor (high-temp or low temp.)	Is belt thermistor cable setting proper? Does error reoccur?	No Yes Yes	Connect cable set properly again. Turn power ON again. Replace belt thermistor and leave aside for 30 min. Then turn power ON again.
Power off/on 918:Error	Duplex FAN Alarm Detection	FAN error inside the Duplex. Is the error issued again when the power is turned on again?	 Yes Yes	Check to see if the Duplex is properly installed. Check to see if the FAN is properly connected. Replace the FAN.
Power off/on 923:Error	Black Image Drum Lock Error	The black image drum (K-ID) does not rotate properly. Is the error message issued again when the power is turned on?	 Yes Yes	Check to see if the K-ID is properly installed. Replace the K-ID. Replace the K-ID motor.
Power off/on 928:Error	Fuser MotorLock Error	The fuser unit does not rotate properly. Does the error reoccur after power cycling?	 Yes Yes	Check to see if the fuser unit is properly installed. Replace the fuser unit. Replace the fuser motor.
Service call 980:Error	Error by media clinging to the fuser	Media has clung to the fuser.		Power OFF Replace the fuser unit.
SDRAM ERROR	PU PCB SRAM error	 Does error reoccur?	 Yes	Turn on the printer again. Replace the PU PCB.
XXXXXXXXXXXXXXXX CRC CHECK NG	A PU download data CRC check error.	After PU data (PU firmware, custom media data and LED head adjustment data) downloading, a CRC check error was detected.		Turn on the printer again and redownload the data (during usual printer operation, the downloading is not performed and the error does not occur).
LOADER VERSION XX XX	PU PCB Flash ROM hash check error	 Does error reoccur?	 Yes	Turn on the printer again. Replace the PU PCB.
WDT ERROR	PU firmware went haywire.	 Does error reoccur?	 Yes	Turn on the printer again. Replace the PU PCB.
COMMUNICATION ERROR	An error in a PU-CU interface.	Is the CU assy installed properly? Does the printer recover from the error by replacing the CU PCB.	No Yes No	Reinstall the assy properly. Replace the CU PCB. Replace the PU PCB.

Note) SERVICE CALL Error 168, Error 171 and Error 175 are likely issued when the printer is cool at 0 deg.C or lower.Therefore, if the printer is cool, turn on the power again after it has warmed up.

7.5.2 Preparing for troubleshooting

(1) LCD Display Malfunction 186
(1-1) Nothing is displayed in LCD 186
(1-2) The first line is black display in LCD 187
(1-3) PLEASE WAIT
(The display changes to “COMMUNICATION ERROR” if you leave them as they are) 188
(1-4) An error message related to the operation panel is displayed. 188
(1-5) “RAM CHECK” or “INITIALIZING” are displayed 189

(2) Irregular Operation of the device after turning on the power 189
(2-1) No operation 189
(2-2) Abnormal sound 190
(2-3) Abnormal odor 191
(2-4) Slow starting time 191

(3) Paper Feed Jam(Error 391:1st Tray) 199
(3-1) Paper feed jam occurs right after turning on the power (1st Tray) 199
(3-2) Paper feed jam occurs right after paper feeding starts (1st Tray) 199

(4) Paper Feed Jam (Error 390:Multi-purpose Tray) 201
(4-1) Paper feed jam occurs right after turning on the power (Multi-purpose Tray) 201
(4-2) Paper feed jam occurs right after paper feeding starts (Multi-purpose Tray) 202

(5) Paper Path Jam(Error 381) 203
(5-1) Paper path jam occurs right after turning on the power 203
(5-2) Paper path jam occurs right after feeding paper 204
(5-3) Paper path jam occurs in a path route 206
(5-4) Paper path jam occurs right after reaching the fuser unit 207

(6) Paper Exit Jam(Error 382) 208
(6-1) Paper exit jam occurs right after turning on the power 208
(6-2) Paper exit jam occurs right after feeding paper 209
(6-3) Paper exit jam occurs in a path route 210

(7) Duplex Print Jam(Error 370,371,372,373,383) 211
(7-1) Duplex print jam occurs right after turning on the power 211
(7-2) Duplex print jam occurs in the Duplex entry 211
(7-3) Duplex print jam occurs in reverse of the paper 212
(7-4) Duplex print jam occurs in the Duplex input 212
(7-5) Paper is not fed to a Regist roller from Duplex section 213

(8) Paper Size Error (Error 400) 213
(8-1) Paper jam occurs when the end of paper is near IN1 sensor. 213

(9) ID Unit Up-Down Error(Service Call 140-143) 214
(9-1) An error occurs in the operation of ID Unit Up 214
(9-2) An error occurs in the operation of ID Unit Down 215

(10) Fuser Unit Error(Error 170-177) 216
(10-1) An error occurs right after turning on the power 216
(10-2) An error occurs in 1 min. from turning on the power 216

(11) Motor Fan Error(Error 120,127,051) 217
(11-1) DUPLEX fan does not rotate in DUPLEX printing 217
(11-2) Every fan in the machine does not rotate 217

(12) Print Speed is Slow (Low Performance) 218
(12-1) Print speed decreases up to 2ppm 218
(12-2) Print speed decreases 218

(13) Option unit is not recognized 218
(13-1) Duplex unit is not recognized 218
(13-2) 2nd Tray unit is not recognized 219
(14) LED head is not recognized(Error 131,132,133,134) 219
(14-1) Service Call 131-134(LED HEAD Missing) 219
(15) Toner cartridge is not recognized(Error 540,541,542,543) 220
(15-1) Errors caused by consumables 220
(15-2) Errors caused by toner sensor 220
(15-3) Errors caused by machine defects 221
(16) Fuse Cutout Error (Error 150-155) 221
(16-1) Fuse cutout errors 221
(17) Dew Condensation Errors (Error 123) 222
(17-1) Dew Condensation 222

Note! When the PU PCB is replaced, first read the data of the EEPROM chip of the old PCB, and then, copy it to the new PCB after the replacement. (See 5.4.1 Precautions on the replacement of engine control PCB).

7.5.2.(1) LCD Display Malfunction

(1-1)Nothing is displayed in LCD

Confirmation Items		Confirmation Tasks	Action at NG
(1-1-1)Confirm fuse			
	F5 (fuse) of PU PCB	Check to see if F5 is blown out.	Replace the PU PCB.
(1-1-2)Confirm connection systems			
	Connection between low-voltage power supply unit and PU PCB	Check to see if the cord from the low-voltage power supply is connected properly to the POWER connector of the PU PCB. Check for any incomplete connection or skew insertion.	Redo the insertion of the cord properly.
	Cord ASSY interconnecting the low-voltage power supply unit and the PU PCB	Check to see if the cord has any wire breakage. Check to see if the cord has any peel-off of the covering. Check for any fault in the cord ASSY, such as dislocated wire, etc.	Replace the cord with a normal one.
	Connection between PU PCB and operator panel PCB	Check to see if the 7pin FFC is properly plugged into the OPE connector of the PU PCB. Check to see if the 7pin FFC is properly plugged into the CN connector of the operator panel PCB. Check for any incomplete connection or skew insertion.	Redo the insertion of the cord properly.
	FFC interconnecting the PU PCB and the operator panel PCB.	Check for wire breakage with a circuit-tester. Also, check visually for peel-off of the covering.	Replace the FFC with a normal one.
	FFC interconnecting the PU PCB and the CU PCB.	Check to see if the 12pin FFC is properly plugged into the CUIF connector of the PU PCB. Check similarly the CU PCB side also.	If the FFC is properly plugged, replace the low-voltage power supply.
(1-1-3)Confirm the power systems			
	AC power supplied to the printer	Check the supply voltage of the AC power.	Supply AC power.
	Voltage setting of low-voltage power supply unit (100V system/230V system)	Measure the supplied AC voltage. Check the power supply settings of the printer in use.(Check the short-circuit plug designed for switching of low-voltage power setting. Short-circuit plug provided/not provided = 100V system/230V system.)	Set the low-voltage power setting to the proper values.
	5V power supplied to the PU PCB	Check the 5V power at pin 7 of the POWER connector of the PU PCB.	Replace the low-voltage power supply.
	5V power supplied to the operator panel PCB	Check the 5V power at pin 4 of the CN connector of the operator panel PCB.	Replace the PU PCB.
(1-1-4)Confirm the power short			
	5V power and 24V power supplied to the PU PCB	Check for short-circuiting through the POWER connector of the PU PCB. 4, 5, 6 pin: 24V 7 pin: 5V 8 pin: 0VL 1, 2, 3 pin: 0VP If there is any short-circuiting, locate it by isolation. Unplug the cords connected to the PU PCB, one by one, and locate the short-circuited part.	Replace the short-circuited part.

(1-2)The first line is black display in LCD

Confirmation Items		Confirmation Tasks	Action at NG
(1-2-1) Check of connections			
	Connection between low-voltage power supply unit and PU PCB	Check to see if the cord from the lower-voltage power supply is connected properly to the POWER connector of the PU PCB. Check for any incomplete connection or skew insertion.	Redo the insertion of the cord properly.
	Cord ASSY interconnecting the low-voltage power supply unit and the PU PCB	Check to see if the cord has any wire breakage. Check to see if the cord has any peel-off of the covering. Check for any fault in the cord ASSY, such as dislocated wire, etc. Check to see if the wires are properly connected on a 1-pin to 1-pin basis.	Replace the cord with a normal one.
	Connection between PU PCB and operator panel PCB	Check to see if the 7-pin FFC is properly plugged into the OPE connector of the PU PCB. Check to see if the 7-pin FFC is properly plugged into the CN connector of the operator panel PCB. Check for any incomplete connection or skew insertion.	Redo the insertion of the cord properly.
	FFC interconnecting the PU PCB and the operator panel PCB.	Check for wire breakage with a circuit-tester. Also, check visually for peel-off of the covering.	Replace the FFC with a normal one.
(1-2-4)Check of LSI operation			
	I/F signal from PU PCB to operator panel PCB	Check to see if there is signal output through the OPE connector of the PU PCB Pin 1: CLK Pin 4: Transmitting data (Transmission of PU PCB) Pin 6: CLR The signal is permanently output if the PCB is normal.	Replace the operator panel PCB.
	I/F signal from operator panel PCB to PU PCB	Check to see if there is signal output through the OPE connector of the PU PCB Pin 3: Receiving data (Reception of PU PCB) The signal is permanently output if the PCB is normal.	Replace the operator panel PCB.

(1-3)PLEASE WAIT

(The display changes to “COMMUNICATION ERROR” if you leave them as they are)

Confirmation Items		Confirmation Tasks	Action at NG
(1-3-1) Check of installed state of PCB			
	Connected state between PU PCB and CU PCB	Check the engagement between the CUIF connector of the PU PCB and the FFC connector of the CU PCB. (Engagement between PU and CU PCBs)	Connect the FFC properly.
	Check to see if the option RAM DIMM/HDD is used in the CU PCB.	Does the PCB operate after the RAM DIMM or HDD is removed? Check for a skew insertion or incomplete insertion. Is the RAM DIMM/HDD a genuine part?	Correct the inserted state of the DIMM. Replace the optional item, if necessary.
(1-3-3) Execution of upgrading of PU firmware version			
	Upgrading of PU firmware version	This indication will be produced following upgrading of the PU firmware version. Verify the PU version by conducting Menu Print or using the maintenance function.	If the error recurs even after the power is turned on again, conduct the checking of (1-3-1) and (1-3-2).

(1-4)An error message related to the operation panel is displayed.

Confirmation Items		Confirmation Tasks	Action at NG
(1-4-1) Error messages			
	Error messages	Check the details in the Error Message Table.	Follow the instructions.

(1-5)“RAM CHECK” or “INITIALIZING” are displayed

Confirmation Items		Confirmation Tasks	Action at NG
(1-5-1) Indications on the operator panel freeze.			
	Operator panel indications	The indication of "RAM CHECK" or "INITIALIZING" remains on permanently.	Replace the CU PCB.
	Check to see if the option RAM DIMM/HDD is used in the CU PCB.	Does the PCB operate after the RAM DIMM or HDD is removed? Check for a skew insertion or incomplete insertion. Is the RAM DIMM/HDD a genuine part? Correct the inserted state of the DIMM.	Replace the optional item, if necessary.

7.5.2.(2) Irregular Operation of the device after turning on the power

(2-1)No operation

Confirmation Items		Confirmation Tasks	Action at NG
(2-1-1) Check of parts related to power supply			
	AC power supplied to the printer	Check the supply voltage of the AC power.	Supply AC power.
	Voltage setting of low-voltage power supply unit (100-V system/230-V system)	Measure the supplied AC voltage. Check the power supply settings of the printer in use. (Check the short-circuit plug designed for switching of low-voltage power supply setting [CN5]. Short-circuit plug provided/not provided = 100-V system/230-V system.)	Set the low-voltage power setting to the proper values.
	5V and 24V power supplied to the PU PCB	Check the power through the POWER connector of the PU PCB. 4, 5, 6 pin: 24V 7 pin: 5V 8 pin: 0VL 1, 2, 3 pin: 0VP	Replace the low-voltage power supply.
(2-1-2) Check of connections			
	Connected state of operator panel	Check the items of (1-1). The operator panel needs to be detected and start operating, so that the printer functions.	Follow the description of (1-1).

(2-2)Abnormal sound

Confirmation Items		Confirmation Tasks	Action at NG
(2-2-1) Check for motor step-out (Abnormal driver)			
	Operating state of motors	Use the self-diagnostic mode to check to see if the motors are operating normally. Check in the presence and absence of a load. If abnormal, the motors will emit a "boo."	Replace the PU PCB
	State of motor cords	Check the laying of motor cords. Check visually, and also check for short-circuiting with a circuit-tester.Disconnect the motor cord on the PCB side, and check the resistance between each pin of the disconnected cord side and the FG. Replace the motor cord.	Redo the laying of the cord properly.
(2-2-2) Check for motor step-out (Loading problem of consumables)			
	Operating state of motors	Use the self-diagnostic mode to check to see if the motors are operating normally. Check in the presence and absence of a load. If abnormal, the motors will emit a "boo."	Replace the corresponding consumable. To use a new consumable on a trial basis, use FUSE KEEP MODE of the System Maintenance Menu.
(2-2-3) Check for gear tooth skip (Loading problem of consumables)			
	Operating state of motors	Use the self-diagnostic mode to check to see if the motors are operating normally. Check in the presence and absence of a load. If abnormal, the motors will emit "pup, pup."	Replace the corresponding consumable. To use a new consumable on a trial basis, use FUSE KEEP MODE of the System Maintenance Menu.
	Installed state of consumables	Visually check to see if the consumables are installed in the prescribed positions where their gears are engaged.	Replace or modify the necessary mechanical part.
(2-2-4) Check of laying of cords			
	Laying of peripheral cords around each cooling FAN	Check to see if the peripheral cords of the FAN are laid so poorly that the FAN blades are touching the cords. If the cords are laid improperly, "cluck, cluck" will be heard.	Correct the laying of cords.
(2-2-5) Check of installed state of mechanical parts			
	Check the installed state of the sill plates under the CU and PU PCBs.	Remove the PCBs and check visually the installed state of the sill plates.	If the sill plates are not hooked in the prescribed positions, correct their installation.

(2-3)Abnormal odor

Confirmation Items		Confirmation Tasks	Action at NG
(2-3-1) Location of source of foul smell			
	Fuser unit	Take out the fuser unit, and check for the smell.	Conduct (2-3-2).
	Low voltage power supply unit	Take out the lower-voltage power supply unit, and check for the smell.	Replace the low-voltage power supply unit.
(2-3-2) Check of state of Fuser unit			
	Life count of fuser unit	Check the life count of the fuser unit in the self-diagnostic mode.	If the unit is like-new, it necessarily emits some foul smell.
	Check for foreign matter in fuser unit	Check for any foreign matter trapped in the fuser unit, such as a paper chip.	Remove the foreign matter.

(2-4)Slow starting time

Confirmation Items		Confirmation Tasks	Action at NG
(2-4-1) Check of fuser unit			
	Halogen lamp	Check the wattage of the halogen lamp installed in the fuser unit.	Replace the lamp with one having the specified voltage and wattage.
(2-4-2) Check of optional parts			
	Expansion memory, HDD	Redo the installation of the optional parts (expansion memory and HDD), and check their operation.	Replace the optional items

(3) Error number and jam location at paper jam

Error No.	Name	Reference	Corresponding sensor	Jam release method
370	Duplex reversal	J1	DUP-IN	Jam release method ③
371	Duplex input	J2	DUP-F	Jam release method ③
372	Feed error at Duplex	J3	IN1	Jam release method ①
373	Multi-feed in Duplex Unit	J4	DUP-B	Jam release method ③
380	Feed	J5	IN2, WR	Jam release method ①
381	Transport	J6	IN1, IN2, WR, EXIT	Jam release method ②
382	Exit	J7	EXIT	Jam release method ②
383	Duplex entry	J8	EXIT, DUP-IN	Jam release method ②
385	Around Fuser Unit	J13	Fuser thermistor	Jam release method ②
390	Feed error at front feeder	J9	IN2, WR	Jam release method ①
391	Tray1	J10	IN1	Jam release method ①, ④
392	Tray2	J11	2nd-IN	Jam release method ④
400	Paper size error	J12	IN1	Jam release method ①

Diagram of jam location

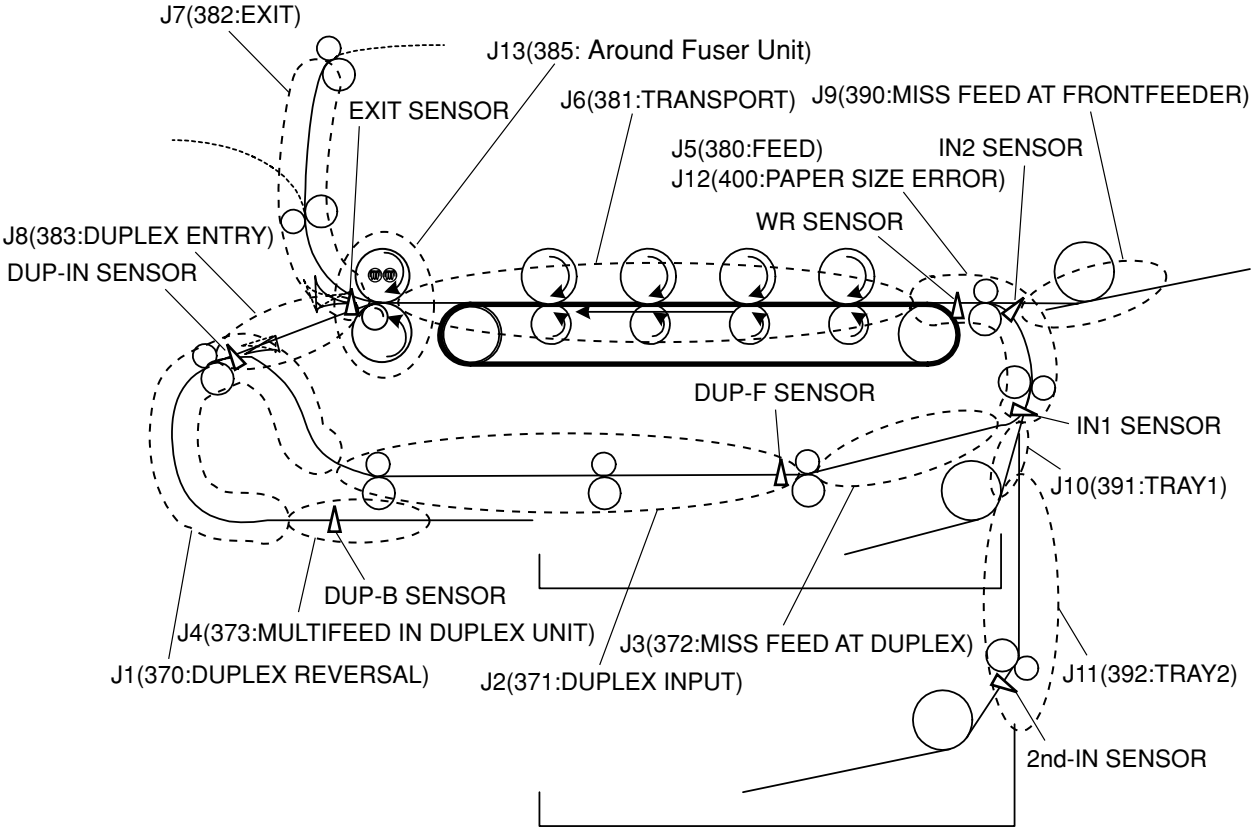

JAM RELEASE METHOD ①

REMOVING THE JAMMED PAPER

FRONT COVER SECTION (CODES: 372, 380, 390, 391, 400)

Open the front cover, and if the leading end or trailing end of the jammed paper is visible, pull out the paper slowly. If code 400 is issued, the paper may be unloaded automatically. If that is the case, opening and closing of the cover will clear the error.

If you see the rear edge of paper

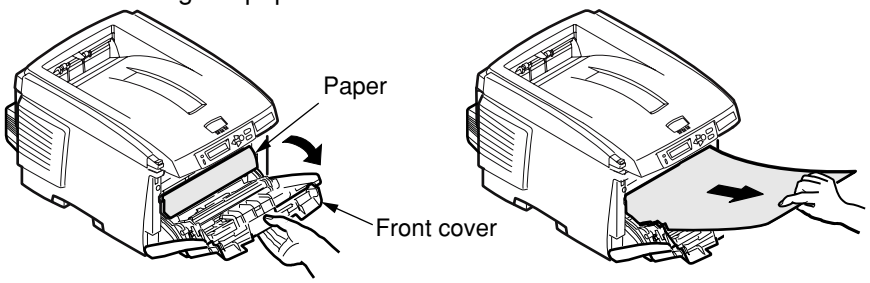

If you see the top edge of paper

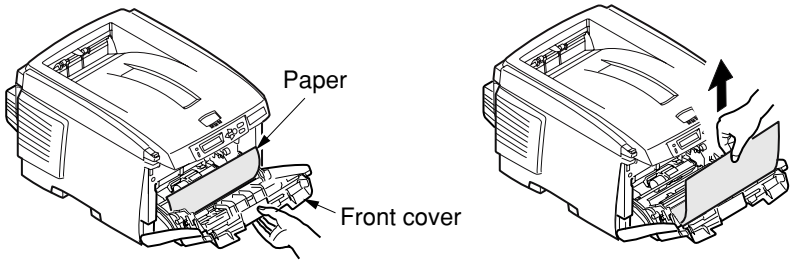

If you do not see the top edge of paper

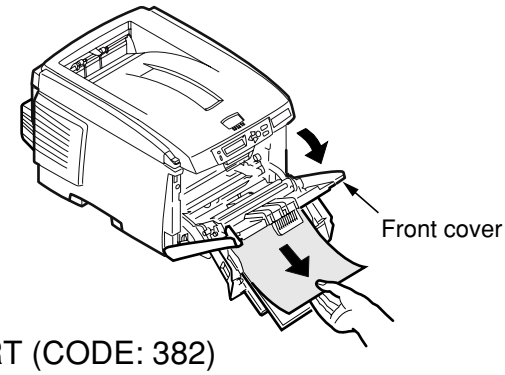

PAPER EXIT PART (CODE: 382)

Pull out the jammed paper from the exit slowly.

Note! Even when paper is jammed in the delivery section, pull out the paper to the inside of the printer, if it is visible under the top cover. Forcing the paper out toward the rear could damage the fuser unit.

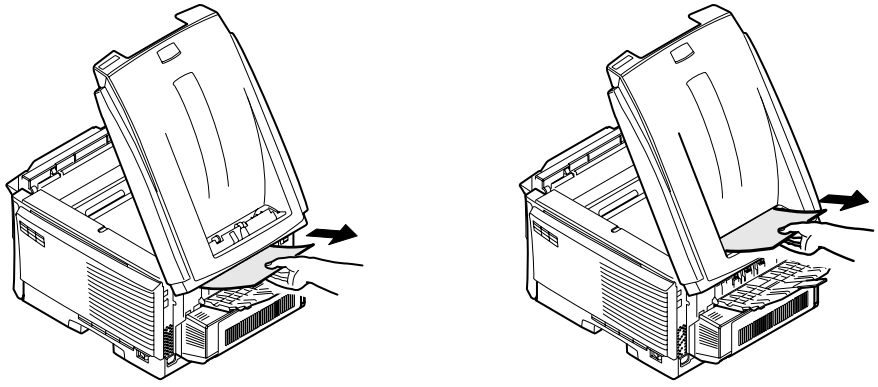

JAM RELEASE METHOD ②

FUSER UNIT SECTION (CODES: 381, 382, 383,385)

⚠Caution	Possible to get burned.	

The fuser unit can be very hot. Be careful not to touch it. If the unit remains hot, do not hasten to work, but wait, until after the unit has cooled down a little, and then remove the paper.

(1) Raise the lock levers (2, blue) of the fuser unit in the direction of the arrows.
(2) Take out the fuser unit holding it by the handle, and place it on a flat table.

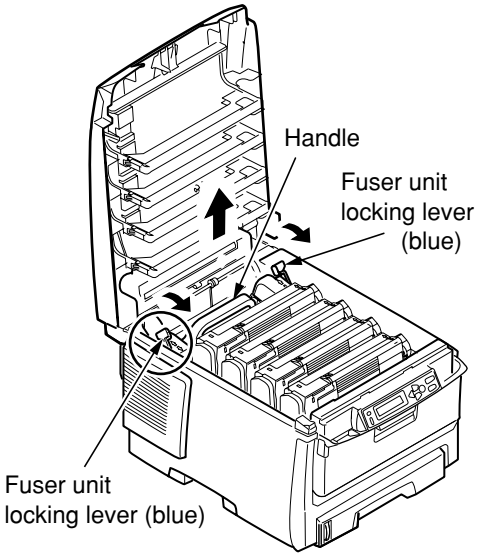

(3) While pushing the lever (Blue) of the fuser unit in the direction of the arrow, pull out the jammed paper always in the direction of the arrow (forward).
4/ Fuser unit lever (Blue)

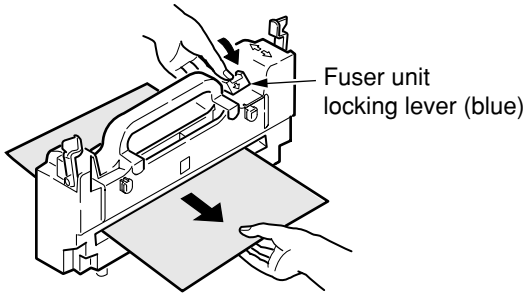

(4) Hold the fuser unit again by the handle and put it gently back in the printer.
(5) Push the lock levers (2, blue) of the fuser unit toward the rear, and fasten the unit

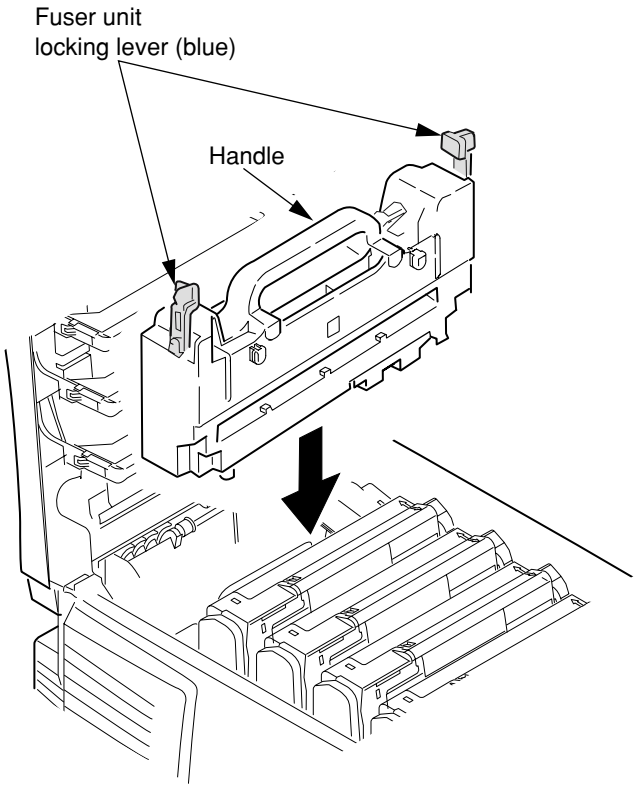

Note! After a jammed paper has been removed from the fuser unit section, unfixed toner may still remain inside the fuser unit. Therefore, execute the Menu Map print (Subsection 3.6), or print blank paper several times.

If the paper jam error is not cleared even after the jammed paper has been removed, remove the other jammed paper by the procedure described below.

(1) Discharge static electricity by touching the screw by hand.

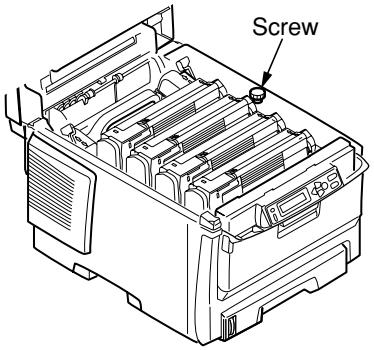

(2) Take out the image drum cartridges (4), and place them on a flat table.
(3) Cover the image drum cartridges thus taken out with a black sheet of paper.

Note! • The image drums (green tubular parts) are extremely vulnerable. Use good caution in handling them.
• Do not expose the image drum cartridges to direct sun or intense light (over approximately 1500 luxes). Even under the room lighting, do not leave them exposed for five minutes or longer.

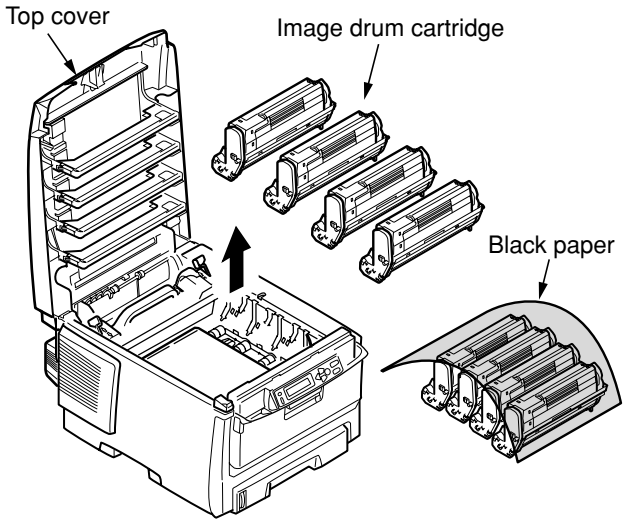

(4) Pull out the jammed paper slowly.

WHEN THE LEADING END OF THE PAPER IS VISIBLE

Pull out the paper slowly to the inside of the printer.

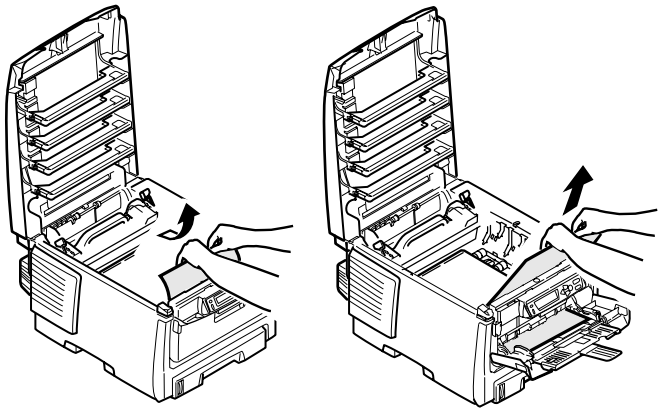

WHEN NEITHER THE LEADING END NOR THE TRAILING END IS VISIBLE

First slide the jammed paper into the direction of the arrow, and then, pull it out slowly.

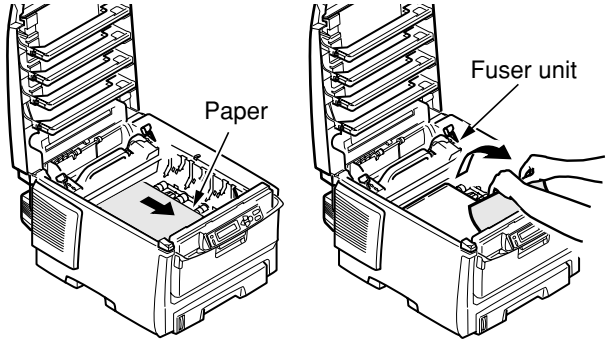

WHEN THE TRAILING END OF THE PAPER IS VISIBLE

While pushing the lever of the fuser unit into the direction of the arrow, pull out the jammed paper slowly.

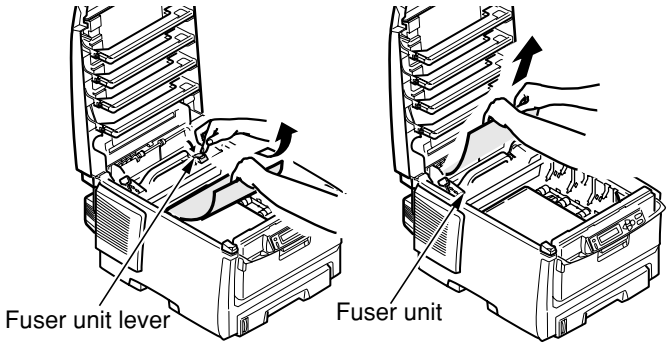

(5) Put the image drum cartridges back in place.

JAM RELEASE METHOD ③

TWO-SIDED PRINT UNIT SECTION (OPTIONAL)(CODES: 370, 371, 373)

(1) Open the two-sided print unit cover by pushing the jam releasing lever of the two-sided print unit section.

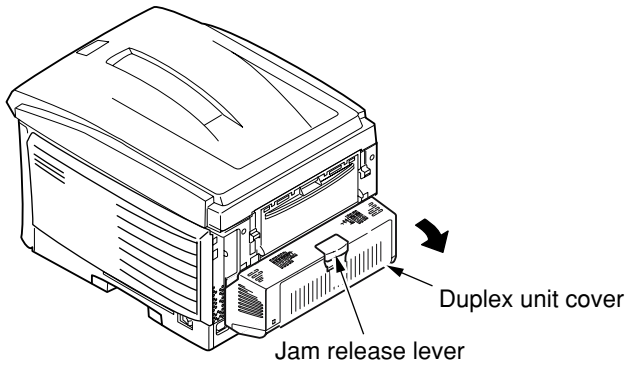

(2) Take out the jammed paper.
If the paper is not visible, close the two-sided print unit cover briefly, and the paper will be unloaded automatically.

Note! If the two-sided print unit needs to be drawn out, turn off the power of the printer.

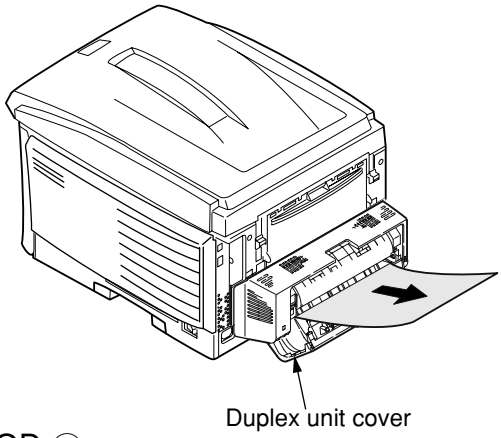

JAM RELEASE METHOD ④

SECOND TRAY UNIT SECTION (OPTIONAL)(CODES: 391, 392)

(1) Draw out the paper cassette of the second tray unit section, and remove the jammed paper.
(2) After removing the paper, open and close the front cover by holding the handle under the operator panel.

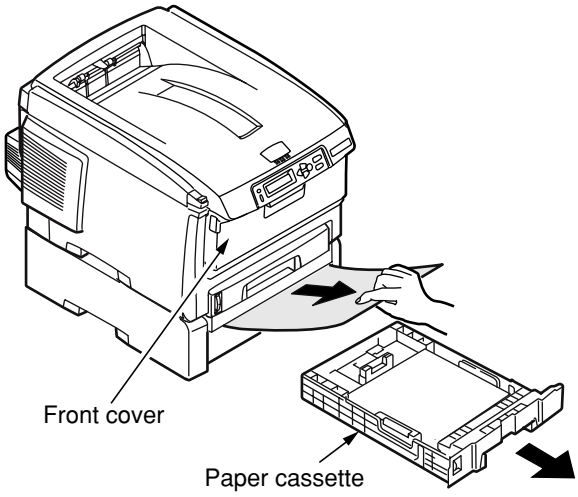

7.5.2.(3) Paper Feed Jam(Error 391:1st Tray)

(3-1)Paper feed jam occurs right after turning on the power (1st Tray)

Confirmation Items		Confirmation Tasks	Action at NG
(3-1-1) Check of state of running route			
	Paper running route in front unit	Open the front cover, and check to see if there is paper jammed on the running route.	Remove the jammed paper
(3-1-2) Check of state of mechanical parts			
	Check the sensor levers of inlet sensors 1 and 2.	Check to see if the sensor levers demonstrate any abnormal shape or motion.	Replace the sensor lever with a normal one.
(3-1-3) Check of electrical parts			
	Check the state of sensor signal detection.	Use the SWITCH SCAN function of the Maintenance Menu to check to see if the sensor signal is detected normally.	Replace the PU PCB, front sensor PCB or the connection cord.
	Check the output levels of inlet sensors 1 and 2	Check the following signals through the FSNS connector of the PU PCB. Pin 4: Inlet sensor 1 Pin 3: Inlet sensor 2 Confirm that the above signal levels vary as the sensor levers are actuated.	Replace the front sensor PCB.
	Check the power supply of the front sensor PCB.	Check the 5-V power through the CN connector of the front sensor PCB. Pin 5: 5V power Pin 1: 0VL	Replace the connection cord.

(3-2)Paper feed jam occurs right after paper feeding starts (1st Tray)

Confirmation Items		Confirmation Tasks	Action at NG
(3-2-1) Check of state of running route			
	Paper running route in front unit	Check to see if there is paper jammed on the running route.	Remove the jammed paper.
(3-2-2) Check of state of mechanical parts			
	Check the sensor levers of inlet sensors 1 and 2.	Check to see if the sensor levers demonstrate any abnormal shape or motion.	Replace the sensor lever with a normal one.

Confirmation Items	Confirmation Tasks	Action at NG
(3-2-3) Check of operating state of motors		
Feed motor	Conduct the Motor and Clutch Test of the self-diagnostic mode, and check to see if the feed motor operates normally.	Replace the PU PCB or feed motor.
Feed motor driver	Unplug the HOP connector of the PU PCB, and confirm the following on the connector side: Several Mohms between pin 1 and FG Several Mohms between pin 2 and FG Several Mohms between pin 3 and FG Several Mohms between pin 4 and FG	Replace the PU PCB.
(3-2-4) Check of connections		
Feed motor drive cord	Check the connected state of the cord. Check for incomplete connection or skew insertion, and check the cord visually to see if it has any assembling problem.	Redo the connection properly. Replace the cord with a normal one.
Feed motor drive cord	Check to make sure that the cord is not caught under any assembled part of the printer. Unplug the HOP connector of the PU PCB, and confirm the following on the cord side: Short-circuiting between pin 1 and FG Short-circuiting between pin 2 and FG Short-circuiting between pin 3 and FG Short-circuiting between pin 4 and FG	Replace the cord, and correct the assembling to make it normal.
Feed motor	Remove the PU PCB and the HOP connector to check whether there is an approximately 3.4 Ω or 5 Ω resistance between pins 1 and 2, and pins 3 and 4.	Replace the feed motor.
(3-2-5) Check of operating state of solenoid		
Feed solenoid	Conduct the Motor and Clutch Test of the self-diagnostic mode, and check to see if the feed solenoid operates normally. Make this checking with the right side plate detached, so that the solenoid is visible.	Replace the PU PCB or feed solenoid.
Feed solenoid	Check to see if there is anything that interferes with the moving part of the solenoid (cord, etc.).	Correct the assembling of the printer to make it normal.
(3-2-6) Check of connections		
Feed solenoid cord	Check the connected state of the cord. Check for any incomplete connection or skew insertion, and check the cord visually if it has any assembling problem.	Correct the connection properly. Replace the cord with a normal one.
Feed solenoid cord	Check to make sure that the cord is not caught under any assembled part of the printer. Unplug the HSOL connector of the PU PCB, and confirm the following on the cord side: Short-circuiting between pin 1 and FG Unplug the HSOL connector, and check to see if there is a resistance of approximately 89 Ω between pin 1 and pin 2.	Replace the solenoid Assy, and redo the reassembling properly.

7.5.2.(4) Paper Feed Jam (Error 390:Multi-purpose Tray)

(4-1)Paper feed jam occurs right after turning on the power (Multi-purpose Tray)

Confirmation Items		Confirmation Tasks	Action at NG
(4-1-1) Check of state of running route			
	Paper running route in front unit	Check to see if there is paper jammed on the running route.	Remove the jammed paper.
(4-1-2) Check of state of mechanical parts			
	Check the sensor levers of inlet sensor 2 and WR sensor.	Check to see if the sensor levers demonstrate any abnormal shape or motion.	Replace the sensor lever with a normal one.
(4-1-3) Check of electrical parts			
	Check the state of sensor signal detection.	Use the SWITCH SCAN function of the self-diagnostic mode to check to see if the sensor signal is detected normally.	Replace the PU PCB, front sensor PCB or the connection cord.
	Check the output levels of inlet sensor 2 and WR sensor.	Check the following signals through the FSNS connector of the PU PCB. Pin 2: WR sensor Pin 3: Inlet sensor 2 Confirm that the above signal levels vary as the sensor levers are actuated.	Replace the front sensor PCB.
	Check the power supply of the front sensor PCB.	Check the 5-V power through the CN connector of the front sensor PCB. Pin 5: 5-V power Pin 1: 0VL	Replace the connection cord.

(4-2)Paper feed jam occurs right after paper feeding starts (Multi-purpose Tray)

Confirmation Items		Confirmation Tasks	Action at NG
(4-2-1) Check of state of running route			
	Paper running route in multi-purpose tray	Check to see if there is paper jammed on the running route.	Remove the jammed paper.
	Sheet receive (reed) of multi-purpose tray	Check to see if the sheet receive is always located in the upper position.	Modify the tray, so that the sheet receive will be raised to the prescribed position.
(4-2-2)Confirm condition of mechanical parts			
	Check sensor levers at the entrance sensor 2 and WR sensor lever	Check to see if the sensor levers demonstrate any abnormal shape or motion.	Replace the sensor lever with a normal one.
	Planetary gears for paper feed control	Conduct the Motor and Clutch Test of the self-diagnostic mode, and actuate the feed motor (FRONT MOTOR) to make sure that both of the planetary gears rotate in their lower positions. (The planetary gear box is the right-hand white molded section, which is accessible by opening the front cover.)	Replace the planetary gear box.
	Front cover	Check to see if the right and left locks of the front cover are properly locked.	Replace the front unit.
(4-2-3) Check of the operating state of motors			
	Feed motor	Conduct the Motor and Clutch Test of the self-diagnostic mode, and check to see if the feed motor operates normally.	Exchange a PU PCB or paper feed motor.
	Feed motor driver	Unplug the HOP connector of the PU PCB, and confirm the following on the connector side: Several Mohms between pin 1 and FG Several Mohms between pin 2 and FG Several Mohms between pin 3 and FG Several Mohms between pin 4 and FG	Exchange a PU PCB
(4-2-4) Check of connections			
	Feed motor drive cord	Check a connection status of the cord. HOP connector of the PU PCB. Check half connection, incomplete plug-in or installation status of the cord by eyes.	Correct the connection properly. Replace the cord with a normal one.
	Cord to drive a paper feed motor	Check to make sure that the cord is not caught under any assembled part of the printer. Unplug the HOP connector of the PU PCB, and confirm the following on the cord side: Short-circuiting between pin 1 and FG Short-circuiting between pin 2 and FG Short-circuiting between pin 3 and FG Short-circuiting between pin 4 and FG	Return the installation to a right status by exchanging a cord.
	Feed motor	Remove the PU PCB and the HOP connector to check whether there is an approximately 3.4 Ω or 5 Ω resistance between pins 1 and 2, and pins 3 and 4.	Replace the feed motor

7.5.2.(5) Paper Path Jam(Error 381)

(5-1)Paper path jam occurs right after turning on the power

Confirmation Items		Confirmation Tasks	Action at NG
(5-1-1) Check of state of running route			
	Paper running route in front unit	Check to see if there is paper jammed on the running route.	Remove the jammed paper.
(5-1-2) Check of state of mechanical parts			
	Check sensor levers of WR sensor	Confirm that there is no abnormality in the shape of the sensor lever and in the operation.	Replace the sensor lever with a normal one.
(5-1-3) Check of electrical parts			
	Check the state of sensor signal detection.	Use the SWITCH SCAN function of the self-diagnostic mode to check to see if the sensor signal is detected normally.	Replace the PU PCB, front sensor PCB or connection cord.
	Check the output level of the WR sensor.	Check the following signal through the FSNS connector of the PU PCB. Pin 2: WR sensor Confirm that the above signal level varies as the sensor lever is actuated.	Replace the front sensor PCB.
	Check the power supply of the front sensor PCB.	Check 5V power with CN connector of a front sensor PCB. 5pin:5V Power 1pin:0VL	Replace the connection cord.

(5-2)Paper path jam occurs right after feeding paper

Confirmation Items		Confirmation Tasks	Action at NG
(5-2-1) Check of state of running route			
	Paper running route on the belt	Remove the ID unit, and check to see if there is paper jammed on the running route.	Remove the jammed paper.
(5-2-2) Check of state of mechanical parts			
	Check the sensor lever of the WR sensor	Check to see if the sensor lever demonstrates any abnormal shape or motion.	Replace the sensor lever with a normal one.
(5-2-3) Check of operating state of motors			
	Feed motor, belt motor, ID motor	Conduct the Motor and Clutch Test of the self-diagnostic mode, and check to see if the feed motor, belt motor and ID motor operate normally. Make this checking in the presence and absence of a load.	Replace the PU PCB, if the feed motor, belt motor, ID-up motor or ID motor is faulty. Replace the feed motor, belt motor or ID motor. Replace the ID unit or belt unit. To use a new consumable on a trial basis, use FUSE KEEP MODE of the System Maintenance Menu.
	Feed motor driver, ID up-motor driver, and belt motor driver	Unplug the HOP connector of the PU PCB, and confirm the following on the connector side: Several Mohms between pin 1 and FG Several Mohms between pin 2 and FG Several Mohms between pin 3 and FG Several Mohms between pin 4 and FG Unplug the BELTIDUP connector of the PU PCB, and confirm the following on the connector side: Several Mohms between pin 1 and FG Several Mohms between pin 2 and FG Several Mohms between pin 3 and FG Several Mohms between pin 4 and FG Several Mohms between pin 5 and FG Several Mohms between pin 6 and FG Several Mohms between pin 7 and FG Several Mohms between pin 8 and FG	Replace the PU PCB, if the feed motor, belt motor, ID up-motor or ID motor is faulty.

Confirmation Items		Confirmation Tasks	Action at NG
(5-2-4) Check of connections			
	Feed motor drive cord, ID motor drive cord, belt motor, ID-up motor drive cord, fuser drive cord	Check the connected states of the cords. Check for any incomplete connection or skew insertion of the HOP connector, DCID connector, DCHEAT connector, BELTIDUP connector and RELAY connector of the PU PCB. Check for any incomplete connection or skew insertion, and examine the cords visually to see if they have any assembling problem.	Correct the connection properly. Replace the cord with a normal one.
	Feed motor drive cord, ID motor drive cord, belt motor, ID-up motor drive cord	Check to make sure that none of the cords is caught under any assembled part of the printer. Unplug the HOP connector of the PU PCB, and confirm the following on the cord side: Short-circuiting between pin 1 and FG Short-circuiting between pin 2 and FG Short-circuiting between pin 3 and FG Short-circuiting between pin 4 and FG Unplug the BELTIDUP connector of the PU PCB, and confirm the following on the cord side: Short-circuiting between pin 1 and FG Short-circuiting between pin 2 and FG Short-circuiting between pin 3 and FG Short-circuiting between pin 4 and FG Short-circuiting between pin 5 and FG Short-circuiting between pin 6 and FG Short-circuiting between pin 7 and FG Short-circuiting between pin 8 and FG	Replace the cord, and correct the assembling to make it normal.
	Feed motor, belt motor, ID up-motor	Unplug the connectors of the respective PCBs, and confirm that there are the following resistances between the pins of the cord side: HOP connector of PU PCB Between pin 1 and pin 2: Approx. 3.5 Ω Between pin 3 and pin 4: Approx. 3.5 Ω BELTIDUP connector of PU PCB Between pin 1 and pin 2: Approx. 6 Ω Between pin 3 and pin 4: Approx. 6 Ω Between pin 5 and pin 6: Approx. 3.5 Ω Between pin 7 and pin 8: Approx. 3.5 Ω	Replace the feed motor, ID motor, or belt motor.

(5-3)Paper path jam occurs in a path route

Confirmation Items		Confirmation Tasks	Action at NG
(5-3-1) Check of operating state of motors			
	Feed motor, belt motor, ID motor, ID up/down-motor	Conduct the Motor and Clutch Test of the self-diagnostic mode, and check to see if the feed motor, belt motor and ID motor operate normally. Make this checking in the presence and absence of a load.	Replace the PU PCB, or replace the feed motor, belt motor, ID motor, or ID up-motor, or replace the ID unit or belt unit. To use a new ID unit or belt unit on a trial basis, use FUSE KEEP MODE of the System Maintenance Menu.
	Feed motor driver, belt motor driver, ID up-motor driver	Unplug the HOP connector of the PU PCB, and confirm the following on the connector side: Several MΩ between pin 1 and FG Several MΩ between pin 2 and FG Several MΩ between pin 3 and FG Several MΩ between pin 4 and FG Unplug the BELTIDUP connector of the PU PCB, and confirm the following on the connector side: Several MΩ between pin 1 and FG Several MΩ between pin 2 and FG Several MΩ between pin 3 and FG Several MΩ between pin 4 and FG Several MΩ between pin 5 and FG Several MΩ between pin 6 and FG Several MΩ between pin 7 and FG Several MΩ between pin 8 and FG	Replace the PU PCB, if the feed motor, belt motor or D motor is faulty, or replace the motor driver PCB if the belt motor is faulty.

(5-4)Paper path jam occurs right after reaching the fuser unit

Confirmation Items		Confirmation Tasks	Action at NG
(5-4-1) Check of operating state of motors			
	Fuser motor	Conduct the Motor and Clutch Test of the self-diagnostic mode, and check to see if the fuser motor operates normally. Make this checking in the presence and absence of a load.	Replace the PU PCB. Replace the fuser motor. Replace the fuser unit. To use a new fuser unit on a trial basis, use FUSE KEEP MODE of the System Maintenance Menu.
(5-4-2) Temperature control of rotating roller			
	Heat roller detection temperature	Check the detection temperature of the heat rollers in the self-diagnostic mode. Check to see if an abnormally low or high temperature is detected.	Replace the fuser unit, or replace the junction PCB or PU PCB. To use a new fuser unit on a trial basis, use FUSE KEEP MODE of the System Maintenance Menu.
(5-4-3) Check of installed state of fuser unit			
	Fuser unit	Check to see if the fuser unit is properly installed (whether it is pushed in to the lowest position).	Install the unit properly in the printer.

7.5.2.(6) Paper Exit Jam(Error 382)

(6-1)Paper exit jam occurs right after turning on the power

Confirmation Items		Confirmation Tasks	Action at NG
(6-1-1) Check of state of running route			
	Paper running route in delivery section	Check to see if there is paper jammed on the running route.	Remove the jammed paper.
(6-1-2) Check of state of mechanical parts			
	Check the sensor lever of the delivery sensor	Check to see if the sensor lever demonstrates any abnormal shape or motion.	Replace the sensor lever with a normal one.
(6-1-3) Check of electrical parts			
	Check the state of sensor signal detection.	Use the SWITCH SCAN function of the self-diagnostic mode to check to see if the sensor signal is detected normally.	Replace the PU PCB, EXIT sensor or connection cord.
	Check the output level of the EXIT sensor.	Check the following signal through the RELAY connector of the PU PCB. Pin 9: EXIT sensor Confirm that the signal level varies as the sensor lever is actuated.	Replace the EXIT sensor.
	Check the power of the junction PCB.	Check the 5-V power through the EXIT connector of the junction PCB. Pin 1: 5-V power Pin 3: 0 VL	Replace the connection cord.
(6-1-4) Check of connections			
	Signal cord for motor driver PCB, EXIT sensor cord	Check to see if the FFC is properly plugged in the RELAY connector of the PU PCB and the PUIF connector of the junction PCB. Check to see if the cord is properly connected in the junction PCB and EXIT sensor.	Correct the connection properly.
	Signal cord for motor driver PCB, EXIT sensor cord	Check to see if the cords are caught under any other part, or have any peel-off of the covering or any assembling problem.	Replace the connection cord, or correct the assembling properly.

(6-2)Paper exit jam occurs right after feeding paper

Confirmation Items		Confirmation Tasks	Action at NG
(6-2-1) Check of state of running route			
	Face-up stacker cover	Check to see if the cover is completely open or closed.	Eliminate imperfect opening or closing of the cover.
	Duplex pull-in gate	Conduct the Motor and Clutch Test of the self-diagnostic mode, and check to see if the Duplex pull-in gate operates normally. Make sure that it is duly on the exit side.	Replace the duplex pull-in gate or replace the duplex solenoid.
	Rear panel	Check to see if the rear panel is installed properly, and if it is not obstructing the paper running route.	Redo the installation of the rear panel.
	Running route in delivery section	Check visually for any load that obstructs running of paper along the route of the delivery section.Check to see if the delivery rollers are stiff in rotating.	Modify the load portion.
(6-2-2) Check of state of mechanical parts			
	Sensor lever of exit sensor	Check to see if the sensor lever demonstrates any abnormal shape or motion.	Replace the sensor lever with a normal one.
(6-2-3) Check of operating state of motor			
	Fuser motor	Conduct the Motor and Clutch Test of the self-diagnostic mode, and check to see if the fuser motor operates normally. Make this checking in the presence and absence of a load.	Replace the PU PCB, fuser motor, or fuser unit. To use a new fuser unit on a trial basis, use FUSE KEEP MODE of the System Maintenance Menu.

Confirmation Items		Confirmation Tasks	Action at NG
(6-2-4) Check of connections			
	Fuser motor drive cord	Check the connected state of the cord. Check visually for any incomplete connection or skew insertion of the DCHEAT connector of the PU PCB or any assembling problem of the cord.	Correct the connection properly. Replace the cord with a normal one.
	Fuser motor		Replace the fuser motor.

(6-3)Paper exit jam occurs in a path route

Confirmation Items		Confirmation Tasks	Action at NG
(6-3-1) Check of operating state of motor			
	Fuser motor	Conduct the Motor and Clutch Test of the self-diagnostic mode, and check to see if the fuser motor operates normally. Make this checking in the presence and absence of a load.	Replace the PU PCB, fuser motor, or fuser unit. To use a new fuser unit on a trial basis, use FUSE KEEP MODE of the System Maintenance Menu.

7.5.2.(7) Duplex Print Jam(Error 370,371,372,373,383)

(7-1)Duplex print jam occurs right after turning on the power

Confirmation Items		Confirmation Tasks	Action at NG
(7-1-1) Check of state of running route			
	Paper running route in duplex unit	Check to see if there is paper jammed on the running route. Open the front cover and see if there is paper jammed in the middle of feeding through the duplex. Open the rear cover and see if there is paper jammed in the reversal path. Draw out the duplex and see if there is paper jammed at the insertion inlet to the Duplex. Open the running path cover of the Duplex and see if there is paper jammed inside.	Remove the jammed paper.
(7-1-2) Check of state of mechanical parts			
	Check the sensor levers of the sensors of duplex.	Check to see if the sensor levers demonstrate any abnormal shape or motion.	Replace the sensor lever with a normal one.
(7-1-3) Check of electrical parts			
	Check the state of sensor signal detection.	Use the SWITCH SCAN function of the self-diagnostic mode to check to see if the sensor signals are detected normally. Check the state of signal detection in two cases: With a sheet of paper placed inside the duplex unit and with the paper removed.	Replace the duplex PCB, sensors or connection cord.

(7-2)Duplex print jam occurs in the Duplex entry

Confirmation Items		Confirmation Tasks	Action at NG
(7-2-1) Check of operating state of solenoid			
	Duplex solenoid	Conduct the Motor and Clutch Test of the self-diagnostic mode, and check the operating state of the Duplex solenoid.	Replace the duplex PCB or solenoid.
	Separator DUP (Delivery/DUP-intake switching gate located immediately after fuser unit)	Conduct the Motor and Clutch Test of the self-diagnostic mode, and check visually the motion of the gate (EXIT SOLENOID). See if its motion is stiff, or its amount of opening/closing is abnormal.	Replace the separator DUP.
	On/off timing of duplex solenoid	Conduct test print with the cover open, and see if the separator DUP opens at the right timing.	Replace the WR sensor lever or solenoid.
(7-2-2) Check of operating state of sensor lever			
	Dup-IN sensor lever	Open the rear cover, touch the Dup-IN sensor lever by hand, and see if its motion is stiff	Replace the Dup-IN sensor lever.
	Dup-IN sensor	Use the SWITCH SCAN function of the self-diagnostic mode to check to see if the sensor signals are detected normally.	Replace the duplex PCB, sensors or connection cord.
(7-2-3) Check of state of running route			
	Reversal transport path	Check to see if there are paper chips, burrs or any other foreign matters in the reversal transport path that obstruct the running of paper.	Remove the foreign matters.

Confirmation Items		Confirmation Tasks	Action at NG
(7-2-4) Check of operating state of motor			
	Duplex motor	Conduct the Motor and Clutch Test of the self-diagnostic mode, and check the operation of the duplex motor. Make this checking by the rotation of the rollers, which are visible as the rear cover is opened.	Replace the duplex PCB or the motor.
	Duplex intake/reversal roller and its pinch roller	Check to see if the intake/reversal roller on the duplex unit side comes into contact with the pinch roller on the cover side when the rear cover of the duplex is closed (Is the pinch roller also rotating when the duplex roller is turning?)	Replace the rear cover.

(7-3)Duplex print jam occurs in reverse of the paper

Confirmation Items		Confirmation Tasks	Action at NG
(7-3-1) Check of operating state of sensor lever			
	Dup-IN sensor lever	Open the rear cover and touch the Dup-IN sensor lever by hand. Check to see if its motion is stiff.	Replace the Dup-IN sensor lever.
	Dup-In sensor	Use the SWITCH SCAN function of the self-diagnostic mode to check to see if the sensor signals are detected normally.	Replace the duplex PCB, sensor or connection cord.
(7-3-2) Check of operating state of motor			
	Duplex motor	Check visually to see if the paper has started reversal motion from the slit of the rear cover. If the reversal motion has not been started, check to see if the planetary gear in the duplex unit is stiff.	Replace the planetary gear.

(7-4)Duplex print jam occurs in the Duplex input

Confirmation Items		Confirmation Tasks	Action at NG
(7-4-1) Check of operating state of sensor levers			
	Dup-F sensor levers	Remove the Duplex, and check the motions of the sensor levers.	Replace the sensor levers.
(7-4-2) Check of sensors			
	Check the state of sensor signal defection.	Use the SWITCH SCAN function of the self-diagnostic mode to check to see if the sensor signals are detected normally. Except for the Dup-In sensor, check the state of signal detection in two cases: With a sheet of paper placed inside the duplex unit and with the paper removed.	Replace the duplex PCB, corresponding sensor or connection cord.

(7-5)Paper is not fed to a Regist roller from Duplex section

Confirmation Items		Confirmation Tasks	Action at NG
(7-5-1)Check the operational condition of the clutch			
	Duplex clutch	Conduct the Motor and Clutch Test of the self-diagnostic mode, and check the operation of the duplex clutch.	Replace the duplex PCB or the clutch.

7.5.2.(8) Paper Size Error (Error 400)

(8-1)Paper jam occurs when the end of paper is near IN1 sensor.

Confirmation Items		Confirmation Tasks	Action at NG
(8-1-1) Check of state of paper feed			
	Multiple feed of paper	Open the front cover, and check to see if multiple sheets are fed through.	If the error recurs even after the jammed paper was removed, replace the reed of the tray in use.
	Paper size	Check to see if the paper size specified for printing matches the size of the paper loaded in the tray.	Change the specified paper size or the paper size in the tray.
	Inlet sensor 1	Check to see if the sensor lever demonstrates any abnormal shape or motion.	Replace the sensor lever with a normal

7.5.2.(9) ID Unit Up-Down Error(Service Call 140-143)

(9-1)An error occurs in the operation of ID Unit Up

Confirmation Items		Confirmation Tasks	Action at NG
(9-1-1) Check for load in the ascent			
	Load in installing/removing of ID unit	Check to see if any abnormal load is felt in installing or removing the ID unit.	Replace the ID unit or right and left side plates. To use a new ID unit on a trial basis, use FUSE KEEP MODE of the System Maintenance Menu.
	Greasing of right and left up-down link levers	Check to see if the slant parts of the link levers are properly greased.	Apply grease.
	Assembled state of right and left up/down link levers	Check to see if any part around the link levers is obstructing their motion.	Reassemble them correctly.
(9-1-2) Up/down mechanism			
	Assembled state around link levers	Check to see if the link levers are assembled in such a manner that they link to the planetary gears.	Reassemble them correctly.
	Right and left link levers	Check to see if the link levers are placed in the positions where the gears are engaged properly (check to see if the link levers are placed with several gear teeth displaced.)	Reassemble them correctly.
(9-1-3) Check of sensors			
	Up/down sensor lever (integrated to the left link lever)	Check to see if the sensor levers demonstrate any abnormal shape or motion.	Replace the left link lever.
	Up/down sensor	Conduct the Motor and Clutch Test of the self-diagnostic mode, and check to see if the sensor signals are detected normally. Block the sensor with a piece of paper, and then, unblock it to see if the SCAN state varies.	Replace the high-voltage PCB.

(9-2)An error occurs in the operation of ID Unit Down

Confirmation Items		Confirmation Tasks	Action at NG
(9-2-1) Check of load in the descent			
	Load in installing/removing of ID unit	Check to see if any abnormal load is felt in installing or removing the ID unit.	Replace the ID unit or modify the right and left side plates.
	Greasing of right and left up-down link levers	Check to see if the slant parts of the link levers are properly greased.	Apply grease.
	Assembled state of right and left up/down link levers	Check to see if any part around the link levers is obstructing their motion.	Reassemble them correctly.
(9-2-2) Installed state of ID unit			
	At least the cyan ID is installed.	Check to see if there is no cyan ID installed when the N- color mode is set.	Install a dummy cyan ID or regular cyan ID..

7.5.2.(10) Fuser Unit Error(Error 170-177)

(10-1)An error occurs right after turning on the power

Confirmation Items		Confirmation Tasks	Action at NG
(10-1-1) Malfunction of thermistors			
	Upper thermistor, lower thermistor, frame thermistor	Check to see if the thermistors are short-circuited or open. Check the resistance value through the connector pins below the fuser unit. (See Subsection 8.1 Check of resistance values (Fuser unit.)	Replace the fuser unit. To use a new fuser unit on a trial basis, use FUSE KEEP MODE of the System Maintenance Menu.
	Installed state of fuser unit	Check to see if the fuser unit is securely pushed in to such a position that the connector at its lower part is plugged in.	Redo the installation of the fuser unit.

(10-2)An error occurs in 1 min. from turning on the power

Confirmation Items		Confirmation Tasks	Action at NG
(10-2-1) Temperature rise of fuser unit			
	Thermostat, halogen lamp	Ensure that the heater control is properly exerted, and touch the fuser unit to confirm that it is hot. If it remains cold, confirm that the resistance between pin 1 and pin 6 of the connectors (2) measures from several Ω to several tens of Ω.	Replace the fuser unit. To use a new fuser unit on a trial basis, use FUSE KEEP MODE of the System Maintenance Menu.
(10-2-2) Temperature rise of fuser unit			
	Installed state of upper thermistor	Check to see if the upper thermistor is installed away from its prescribed position, causing the temperature to be measured low. Detach the heater cover, and check visually for warpage of the sensor, etc.	Replace the fuser unit. To use a new fuser unit on a trial basis, use FUSE KEEP MODE of the System Maintenance Menu.
	Installed state of lower thermistor	Check to see if the lower thermistor is located away, whereas it should be in contact with the unit, causing a lower temperature than the prescribed one to be detected.	Replace the fuser unit. To use a new fuser unit on a trial basis, use FUSE KEEP MODE of the System Maintenance Menu.
(10-2-3) AC input for halogen lamp			
	AC voltage of low-voltage power supply	Check to see if the AC voltage for the heater is supplied normally. Between pins 1 and 2 and between pins 3 and 4 of the CN connector of the power supply.	Replace the low-voltage power supply.
	Heater-on signal delivered from PU to low-voltage power supply	Check to see if the heater-on signal turns active at the warming-up timing. "L" active while it is ON. Pin 11 and pin 12 of the POWER connector of the PU PCB	Replace the PU PCB.

7.5.2.(11) Motor Fan Error(Error 120,127,051)

(11-1)DUPLEX fan does not rotate in DUPLEX printing

Confirmation Items		Confirmation Tasks	Action at NG
(11-1-1) Connection and laying of cord			
	Connection and laying of Duplex fan cord	Check to see if the connector is properly connected. Check to see if the surplus portion of the cord is touching the blades of the fan.	Redo the insertion of the connector. Correct the cord laying route. Replace the fan.
	24V fuse F501 of duplex PCB	Check to see if the fuse F501 is blown out or not.	Replace the duplex PCB.
	24V supply of duplex PCB	Check to see if the fuse F3 of the PU PCB is blown out or not.	Replace the PU PCB.

(11-2)Every fan in the machine does not rotate

Confirmation Items		Confirmation Tasks	Action at NG
(11-2-1) 24V power supply			
	Fuses F2 and F4 of PU PCB	Check to see if the F2 and F4 are open or not.	Replace the PU PCB.
	24V power supplied to PU PCB	Check the power through the POWER connector of the PU PCB. Pins 4, 5, 6: 24V Pin 8: 0VL Pins 1, 2, 3: 0VP	Replace the low-voltage power supply.

7.5.2.(12) Print Speed is Slow (Low Performance)

(12-1)Print speed decreases up to 2ppm

Confirmation Items		Confirmation Tasks	Action at NG
(12-1-1) Environmental temperature			
	Environmental temperature of the location where the printer is installed	Check to see if the printer is located in such a small room that the environmental temperature gets unusually high, or the cooling effect of the fans cannot be obtained.	Review the installation environment (especially, check to see if the intake port or delivery port of the fan is blocked).

(12-2)Print speed decreases

Confirmation Items		Confirmation Tasks	Action at NG
(12-1-2) Setting of Media Weight			
	Media Weight specified for printing	Check to see if a wrong Media Weight is specified.	Correct the Media Weight.

7.5.2.(13) Option unit is not recognized

(13-1)Duplex unit is not recognized

Confirmation Items		Confirmation Tasks	Action at NG
(13-1-1) Duplex PCB			
	Duplex unit	Check to see if the duplex unit in use conforms to the C6150/C6050/C5950/C5850/C5750/C5650 specification (A unit conforming to the C3200/C5540/C5510/C5450/C5250/C3100/ ML3100/C5200/ML5200/C5100/ ML5100/C5300/ML5300 specification cannot be connected).	Replace the Duplex unit.
(13-1-2) Check of connections			
	Connections from PU PCB to duplex PCB.	Check to make sure that the cord is properly connected from the DU connector of the PU PCB to the duplex PCB.	Correct the connections.
	Square connector connecting the duplex unit to the printer	Check to see if there is any foreign matter trapped in the connecting part of the square connector	Remove the foreign matter.
	Square connector connecting the duplex unit to the printer	Check to see if the pins of the square connector are broken.	Replace the connector.
(13-1-3) Check of control signal			
	Signal delivered from PU PCB to duplex PCB	Check the signal delivered through the OPTION connector of the PU PCB. Pin 6: TXD(PU→DUP) Pin 4: RXD(DUP→PU)	Replace the PU PCB.

(13-2)2nd Tray unit is not recognized

Confirmation Items		Confirmation Tasks	Action at NG
(13-2-1) 2nd tray PCB			
	2nd tray unit	Check to see if the 2nd tray unit in use conforms to the C5900dn specification (A unit conforming to the C5850n specification cannot be connected).	Replace the 2nd tray unit.
(13-2-2) Check of connections			
	Connections from PU PCB to 2nd tray PCB	Check to make sure that the cord is properly connected from the 2nd connector of the PU PCB to the 2nd tray PCB.	Correct the connections.
	Correct the connections.	Check to see if there is any foreign matter trapped in the connecting part of the square connector.	Remove the foreign matter.
	Square connector connecting the 2nd tray unit to the printer	Check to see if the pins of the square connector are broken.	Replace the connector.
(13-2-3) Check of control signal			
	Signal delivered from PU PCB to 2nd tray PCB	Check the signal delivered through the OPTION connector of the PU PCB. Pin 5: TXD(PU → 2nd) Pin 3: RXD(2nd → PU)	Replace the PU PCB.

7.5.2.(14) LED head is not recognized(Error 131,132,133,134)

(14-1)Service Call 131-134(LED HEAD Missing)

Confirmation Items		Confirmation Tasks	Action at NG
(14-1-1) Check of connections			
	Connected state between CU PCB connector and head connector	Check visually the connected state of the FFC.	Redo the connection properly.
	Head FFC	Unplug the FFC of the head, and check for any wire breakage or peel-off of the covering along the cord.	Replace the head FFC or CU PCB.
	Check of Fuse conduction on CU PCB	Check voltage is 5V between capacitor CP6(C5850),CCP1(C5950)(See section 7.6)	Replace the CU PCB

7.5.2.(15) Toner cartridge is not recognized(Error 540,541,542,543)

(15-1)Errors caused by consumables

Confirmation Items		Confirmation Tasks	Action at NG
(15-1-1) Installed state of consumables			
	ID units and toner cartridges	Are the ID units installed in the right positions? Check to see if the lock levers of the toner cartridges are locked.	Redo the installation properly.

(15-2)Errors caused by toner sensor

Confirmation Items		Confirmation Tasks	Action at NG
(15-2-1) State of toner sensor			
	Toner sensor	Is the toner sensor lens stained with toner?	Wipe off the stain
	Toner sensor	Use the SWITCH SCAN function of the diagnostic mode to check to see if the sensor is normal. Hold a white paper in front of the sensor, and see if the SCAN state varies.	Replace the toner sensor PCB, PU PCB or the FFC between the toner sensor PCB and PU PCB.

Note! How to check a toner sensor operation with SWITCH SCAN in the self-diagnosis mode.

(1) Confirmation of the operation in the device

1) Change to a display that a changing situation of the toner sensor is confirmed from the operation panel in the self-diagnosis mode.
   Refer to Section 5.4.2.3 Switch Scan Test as for how to display the operation panel.
2) When taking out an ID unit and toner cartridge (TC) from the device, there is a window on the observers' right from the device, in a position across to the side of the TC.
   In that window, a toner sensor is located.
3) Hold up a piece of white paper against a sensor in a place within 3mm from a sensor window.
4) The operation panel displays "L" if a piece of paper has light reflection and it displays "H" if not.
5) By holding up a piece of paper, if the operation panel changes "H"to "L" or "L" to "H", the device operates normally.

Response in NG:

- Clean a toner of the sensor surface and clear paper dust.
- Confirm a connection state of FFC cable between the toner sensor PCB and PU PCB.
- Check an operation again and exchange PU PCB or a toner sensor PCB if there is no change.

(2) Confirmation of the operation in Toner Cartridge (TC)

1) Install a TC and ID unit in a position where normal operation of the device has confirmed in Confirmation (1) and check operation in the operation panel.
2) The display of the operation panel changes "H" to "L" or "L" to "H" in conjunction with an action of TC white light reflector when operation of TC is normal.

Response in NG:

- Confirm an operation state of each ID motor by MOTOR&CLUTCH TEST in the self-diagnosis mode.
- Clean the surface of the white light reflector at the side of TC. (Dirty from a toner or paper dust.)
- Exchange a TC of a different color and ID unit by the set..
  Exchange a TC or ID unit if the set of the different color is OK.

(15-3)Errors caused by machine defects

Confirmation Items		Confirmation Tasks	Action at NG
(15-3-1) Loading on ID unit			
	ID Unit	Is a heavy load imposed on the ID unit, for example, because the waste toner belt was ruptured?	Replace the ID unit. To use a new ID unit on a trial basis, use FUSE KEEP MODE of the System Maintenance Menu.
(15-3-2) Operating state of motors			
	ID motor	Use the SWITCH SCAN function of the self-diagnostic mode to check to see if each ID motor operates normally. Make this checking in the presence and absence of a load.	Replace the PU PCB or the ID motor.

7.5.2.(16) Fuse Cutout Error (Error 150-155)

(16-1)Fuse cutout errors

Confirmation Items		Confirmation Tasks	Action at NG
(16-1-1) Check of connections			
	FFC interconnecting the PU PCB and the toner sensor PCB	Check for any incomplete insertion or skew insertion of the SSNS connector of the PU PCB and the SSNS connector of the toner sensor PCB. Also check to see if the FFC has any wire breakage of peel-off of the covering.	Redo the connection of the FFC properly. Or, replace the FFC.
(16-1-2) Fuse-cut circuit			
	PU PCB	After checking the connections, turn on the power again, and see if the error is issued again.	Replace the PU PCB.

7.5.2.(17) Dew Condensation Errors (Error 123)

(17-1)Dew Condensation

Confirmation Items		Confirmation Tasks	Action at NG
(17-1-1) Check of connections			
	Connection between PU PCB and high-voltage PCB	Check to see if the 13-pin FFC is properly plugged into the HVOLT connector of the PU PCB. Also check to see if the 13-pin FFC is properly plugged into the CN connector of the high-voltage PCB. Search for an imperfect connection or skew insertion.	Correct the insertion of the cord properly.
	FFC interconnecting the PU PCB and the high-voltage PCB	Check for a wire breakage with a circuit-tester. Check visually for peel-off of the covering.	Replace the connector with a normal FFC.
(17-1-2) Environmental condition			
	Heavy variation of environmental condition	Check to see if the environmental condition has changed from a low-temperature condition to a high temperature condition in a short time. (For example, the printer was moved from storage in a cold region to an office environment.)	Switch on the printer again after acclimatizing it to the new environmental temperature for one hour or so. Before turning on the power, touch the sheet metal of the controller panel on the back and internal sheet metals in order to see how the casing of the printer is warming up. Turn on the power again when much difference from the room temperature is no longer perceived

7.5.3 Image Problem Troubleshooting

(1) Color is totally pale (Fig.7.2 A) 224
(1-1) Color is pale 224
(2) Background is dirty (Fig.7.2 B) 225
(2-1) Background is dirty (partly) 225
(2-2) Background is dirty (totally) 225
(3) Blank Print (Fig.7.2 C) 226
(3-1) Blank on the whole page 226
(4-2) Thin vertical lines (without color) (See Fig.7.2 F) 227
(4) Vertical lines are printed 227
(4-1) Thin vertical lines (with color) (See Fig.7.2 D) 227
(5) Cyclic Print Trouble (Refer to Fig.7.2 E) 228
(5-1) Vertical cyclic print trouble 228
(6) Color registration is wide. 229
(6-1) "IN ADJUSTING COLOR REGISTRATION" is shown only a short time 229
(6-2) Although REG ADJUST TEST of the engine maintenance function is OK, Color drift is seen 229
(7) Solid Black Print 230
(7-1) Solid black on a full page 230

Note! **Read a content of EEPROM chip on the old board and copy it to a new board when exchanging a PU PCB.**

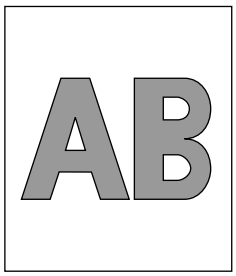

A Light or faded image on whole page

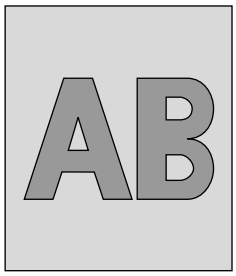

B Dirty Background

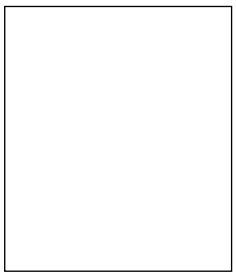

C Blank

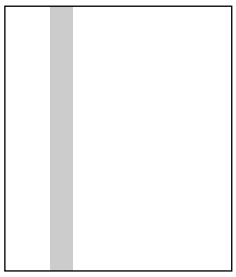

D Vertical black belt or line

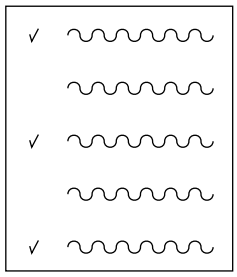

E Defective image of regular interval

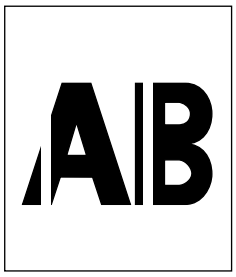

F Vertical white belt or line

Figure 7.2

7.5.3.(1) Color is totally pale (Fig.7.2 **A**)

(1-1)Color is pale

Confirmation Items		Confirmation Tasks	Action at NG
(1-1-1) Toner			
	Remaining quantity of toner	Check to see if "ORDER TONER" or "REPLACE TONER" appears on the operator panel.	Replace the toner cartridge with a new one.
	Tape at the opening of toner cartridge	Check to see if the tape placed at the opening of the toner cartridge has been removed or not.	Close the lever of the toner cartridge, and peel off the tape from the opening.
(1-1-2) LED head			
	LED head lens	Check to see if the lens surface of the LED head is stained with toner or paper chips.	Clean the lens with the LED head lens cleaner.
	Installed state of LED head	Check to see if the LED head is properly installed in the LED head holder. Also check to see if the right and left tension springs are properly installed.	Correct the installation properly.
(1-1-3) Print media			
	Type of medium	Check to see if the medium loaded in the printer is not something particularly thick.	Use the prescribed paper.
(1-1-4) High-voltage terminal			
	ID unit terminal	Ensure visually that the high-voltage terminal of the ID unit is duly in contact with the contact ASSY (see Figure 7-3).	Replace the ID unit or modify the high-voltage terminal. To use a new ID unit on a trial basis, use FUSE KEEP MODE of the System Maintenance Menu.
(1-1-5) Installed state of ID unit			
	Lowest position of ID unit (Deficient transfer)	Draw out and insert the ID unit by hand repeatedly, and check to see if it is normally lowered to its lowest position free from any abnormal load. Not acceptable (NG) if the leading edge of a sheet of paper inserted in between the drum and the belt can readily be passed through.	Check the U-grooves of the side plates for any trouble. If the trouble is irreparable, replace the printer.

7.5.3.(2) Background is dirty (Fig.7.2 **B**)

(2-1)Background is dirty (partly)

Confirmation Items		Confirmation Tasks	Action at NG
(2-1-1) ID unit			
	Drum exposed to light	Check to see if the ID unit has been left in an environment where its surface was exposed to light for a long time.	Replace the ID unit. To use a new ID unit on a trial basis, use FUSE KEEP MODE of the System Maintenance Menu.
	Leak of toner	Check to see if toner is leaking from the ID unit or toner cartridge.	Replace the ID unit or toner cartridge. To use a new ID unit on a trial basis, use FUSE KEEP MODE of the System Maintenance Menu.
(2-1-2) Fuser unit			
	Offset toner of fuser unit	Check to see if the fuser unit has offset toner from the previous print job sticking.	Repeat idle printing by using waste medium, until the offset toner is exhausted to the print medium. Or, replace the fuser unit. To use a new fuser unit on a trial basis, use FUSE KEEP MODE of the System Maintenance Menu.

(2-2)Background is dirty (totally)

Confirmation Items		Confirmation Tasks	Action at NG
(2-2-1) Print medium			
	Type of medium	Check to see if an especially thin medium is used for printing.	Use the prescribed paper.
(2-2-2) High-voltage terminal			
	ID unit terminal	Ensure visually that the high-voltage terminal of the ID unit is properly in contact with the contact ASSY (see Figure 7-3).	Replace the ID unit or modify the high-voltage terminal. To use a new ID unit on a trial basis, use FUSE KEEP MODE of the System Maintenance

7.5.3.(3) Blank Print (Fig.7.2 **C**)

(3-1)Blank on the whole page

Confirmation Items		Confirmation Tasks	Action at NG
(3-1-1) State of toner			
	Remaining quantity of toner	Check to see if a sufficient quantity of toner remains in the toner cartridge.	Replace the toner cartridge.
(3-1-2) State of exposure			
	LED head	Check to see if the LED head faces the drum properly in the prescribed position when the cover is closed. Also check to see if there is something on the light-emitting surface of the LED head that obstructs the light emission.	Correct the installed position of the LED head.
	Connected state of LED head	Check to see if the LED head is properly connected.	Replace the LED head.
	Drum shaft	Check to see if the drum shaft is so mounted that it properly touches the right and left side plates.	Replace the ID unit. To use a new ID unit on a trial basis, use FUSE KEEP MODE of the System Maintenance Menu.
(3-1-3) High-voltage terminal			
	ID unit terminal	Ensure visually that the high-voltage terminal of the ID unit is properly in contact with the contact ASSY (see Figure 7-3).	Replace the ID unit or high-voltage PCB. Or, modify high-voltage terminal. To use a new ID unit on a trial basis, use FUSE KEEP MODE of the System Maintenance Menu.

7.5.3.(4) Vertical lines are printed

(4-1)Thin vertical lines (with color) (See Fig.7.2 **D**)

Confirmation Items		Confirmation Tasks	Action at NG
(4-1-1) State of ID unit			
	Filming of ID unit	Check to see if the print was conducted in the absence of toner.	Replace the toner cartridge with a new one. If still the error is issued, replace the ID unit. To use a new ID unit on a trial basis, use FUSE KEEP MODE of the System Maintenance Menu.

(4-2)Thin vertical lines (without color) (See Fig.7.2 **F**)

Confirmation Items		Confirmation Tasks	Action at NG
(4-2-1) State of LED head			
	LED head	Check to see if the LED head has any foreign matter sticking to the light-emitting surface of the SELFOC lens.	Remove the foreign matter.
(4-2-2) Running state of paper			
	Path route	Check to see if there is a burr in the paper running path before fuser that scratches unfixed toner.	Remove the burr.

7.5.3.(5) Cyclic Print Trouble (Refer to Fig.7.2 **E**)

(5-1)Vertical cyclic print trouble

Confirmation Items		Confirmation Tasks	Action at NG
(5-1-1) Periodicity			
	Image drum	Check to see if the periodicity is 94.25 mm or not.	Replace the ID unit.
	Development roller	Check to see if the periodicity is 39.68 mm or not.	Replace the ID unit.
	Toner supply roller	Check to see if the periodicity is 58.36 mm or not.	Replace the ID unit.
	Charging roller	Check to see if the periodicity is 37.7 mm or not.	Replace the ID unit.
	Roller on the fuser unit	Check to see if the periodicity is 86.39 mm or not.	Replace the fuser unit.
	Transfer roller (Black)	Check to see if the periodicity is 50.27 mm or not.	Replace the belt unit.
	Transfer roller (Color)	Check to see if the periodicity is 43.98 mm or not.	Replace the belt unit.
			To use a new consumable part on a trial basis, use FUSE KEEP MODE of the System Maintenance Menu.

7.5.3.(6) Color registration is wide.

(6-1)"IN ADJUSTING COLOR REGISTRATION" is shown only a short time

Confirmation Items		Confirmation Tasks	Action at NG
(6-1-1) Color registration result			
	Color registration time (Approx. 50 sec if normal)	Execute REG ADJ UST TEST in the self-diagnostic mode, and check the result. Any error issued is not displayed if the ONLINE indication is on.	Replace the sensor that originated NG. Clean the sensor. Replace the shutter. Replace the PU PCB.
(6-1-2) Toner			
	Remaining quantity of toner	Check to see if "ORDER TONER" or "REPLACE TONER" is displayed on the operator panel.	Replace the toner cartridge with a new one.
(6-1-3) Color registration sensor			
	Dirty sensor	Check to see if the sensor has toner or paper chips sticking.	Wipe off the dirt.
(6-1-4) Color registration sensor shutter			
	Defects of the shutter operation	Check the shutter operation in the self-diagnostic mode.	Replace the shutter or modify the mechanism.

(6-2)Although REG ADJUST TEST of the engine maintenance function is OK, Color drift is seen

Confirmation Items		Confirmation Tasks	Action at NG
(6-2-1) Paper feed system			
	State of paper feed system of running route	Check to see if there is anything on the paper feed route that hinders the paper from running.	Remove the obstacle.

7.5.3.(7) Solid Black Print

(7-1) Solid black on a full page

Confirmation Items		Confirmation Tasks	Action at NG
(7-1-1) High-voltage contact state			
	CH terminal	Check visually from above to see if the terminal extending from the printer is properly in contact with the high-voltage terminal on the left side of the ID unit.	Replace the terminal of the printer side.
	CH terminal	Check to see if the high-voltage terminal remains in normal contact on the high-voltage PCB. Remove the high-voltage PCB by opening the left cover, and check to see if the terminal is abnormally installed.	Redo the installation of the terminal properly.
	ID unit terminal	Ensure visually that the high-voltage terminal of the ID unit is properly in contact with the contact ASSY (see Figure 7-3)	Replace the ID unit, high-voltage PCB, or modify the high-voltage terminal. To use a new ID unit on a trial basis, use FUSE KEEP MODE of the System Maintenance Menu.
(7-1-2) State of high-voltage output			
	CH output	If a high-voltage probe is available among the maintenance tools, open the left cover, and check the CH output with the high-voltage probe through the solder side of the high-voltage PCB while the machine is printing. (The high-voltage probe is not an ordinary maintenance tool.)	Replace the high-voltage PCB.

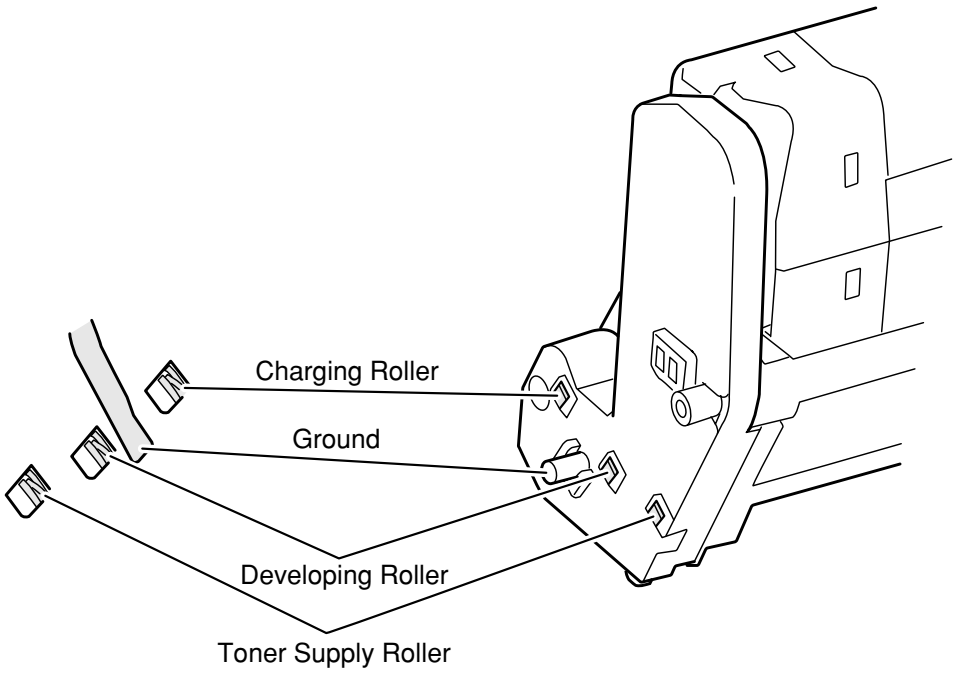

Figure 7.3

7.5.4 Actions after forced initialization of HDD/Flash

This subsection explains the actions to be taken after a troubled HDD or Flash has been subjected to forced initialization.

1) Action after forced initialization of HDD
   If the HDD is forcibly initialized, the following data is deleted. There is no way to recover it.
   - Unprinted data inside the HDD
   - Log data of JobAccount (If JobAccount is active at the time)

2) If the Flash is forcibly initialized, the following data is deleted, making it impossible to use the network.
   - NIC-F/W
   - Web Page data
   - Demonstration page data for OEM (If the printer is for OEM)

The above NIC-F/W, Mac address and Web Page data need to be written to a flash by means of the Maintenance Utility.

Note! Do not execute this initialization in normal condition.

7.5.5 Network Troubleshooting

(1)Cannot print from Utility.

Confirmation Items		Confirmation Tasks	Action at NG
((1) Check of LINK light			
	(1) Check of LINK light	Check to see if the LINK light (green) is on. Check to see if the HUB and the printer are properly linked. (Check to see if the network cable is properly connected.)	Redo the connection of the network cable.
		Check to see if a straight cable is in use.	Replace the cable with a straight cable.
		]Insert a Network cable to a different HUB port.	Replace the HUB.
(2) Check of network information			
	Check to see if network information can be printed correctly.	Press the Push-SW of the NIC card to print the network information.	Rewrite NIC-F/W with the utility
(3) Check of contents of network information			
	Check the IP address, SUB-net mask and gateway address.	Check an IP address, Subnet mask, Gateway address printed on Network information.	Set an IP address, Subnet mask, and Gateway address correctly
(4) Check to see if communication can be held through the network.			
	Check to see if a Ping command can be sent from the PC to the printer.	Check the IP address, SUB-net mask and gateway address which are printed in the network information.	Set an IP address, Subnet mask, Gateway address correctly
(5) Check of Utility			
	Check the settings of the OKILPR Utility.	Check the set items of the OKILPR Utility.	Set the set items of the OKILPR Utility correctly.
(6) Check through standard OS port			
	Check the standard LRP port conforming to the WINDOWS standard (NT, 2000, XP).	Set the standard LPR port conforming to the WINDOWS standard (NT, 2000, XP), and see if print can be executed.	Set the standard LPR port conforming to the WINDOWS standard (NT, 2000, XP) correctly.

7.6 Check of fuses

If any of the following errors is issued, check the corresponding fuse on the CU PCB, PU PCB or high-voltage power supply PCB. (See Table 7-6.)

Table 7-6 Fuse Error

Fuse Name		Error Description	Insert Point
PU PCB	F1	Hopping error ID up/down error	Feed motor, ID up/down motor, 24V High voltage, fan, update Ver.
	F2	Power supply fan error Hopping error	Power supply fan, paper feed solenoid, 24V
	F3	Duplex fan error 2nd hopping error	Duplex, 2nd 24V
	F4	Cover open	Belt motor, high-voltage PCB, 24V
	F5	Power interruption	PU PCB, 5V
High Voltage PCB	IP901	Cover open	High voltage, 24V
	IP902	Service Call Error 121	High voltage, 5V
CU PCB (PDL CU PCB C6150/C6050 C5950/C5750)	F501	HDD is not recognized.	HDD Power 5V
	F502	Can not print from centronics I/F.	+3.3V
	F503	Can not print from centronics I/F.	+5V
	F505, F506	Service Call Errors 131 to 134	LED HEAD 5V
CU PCB (GDI CU PCB C5850/C5650)	F1	Service Call Errors 131 to 134	LED HEAD 5V

8. CONNECTION DIAGRAMS

8.1 Check of resistance values

Unit	Circuit diagram & configuration	Part schematic	Resistance value
Transport belt motor	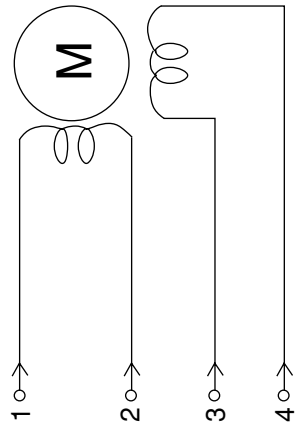	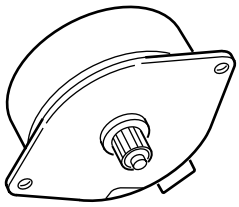	Between pin 1 and pin 2: 3.4Ω Between pin 3 and pin 4: 3.4Ω or Between pin 1 and pin 2: 5Ω Between pin 3 and pin 4: 5Ω
ID motor	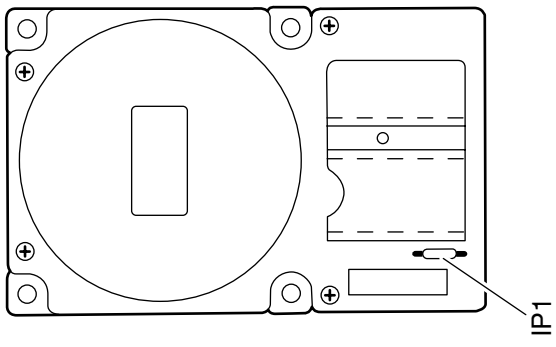	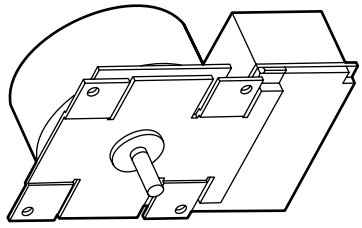	Both ends of IP1: 1Ω or less

Unit	Circuit diagram & configuration	Part schematic	Resistance value
ID up/down motor	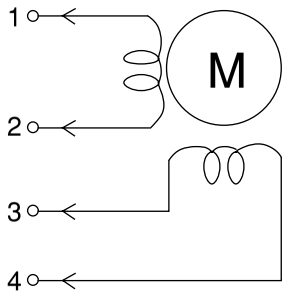	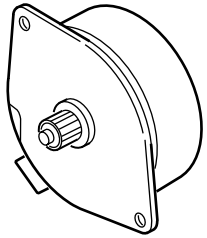	Between pin 1 and pin 2:6.1Ω Between pin 3 and pin 4:6.1Ω or Between pin 1 and pin 2: 8.5Ω Between pin 3 and pin 4: 8.5Ω
Fuser unit motor	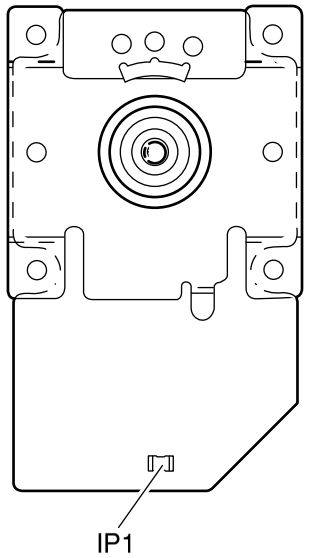	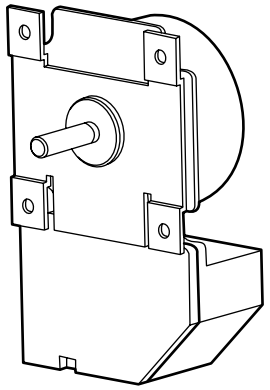	Both ends of IP1: 1Ω or less

Oki Data CONFIDENTIAL

Unit	Circuit diagram & configuration	Part schematic	Resistance value
Feed motor	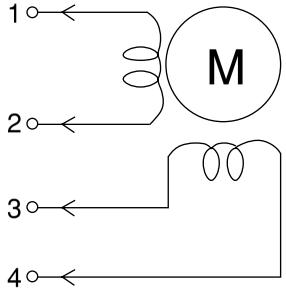	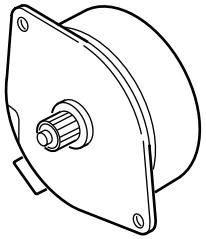	Between pin 1 and pin 2: 3.4Ω Between pin 3 and pin 4: 3.4Ω or Between pin 1 and pin 2: 5Ω Between pin 3 and pin 4: 5Ω
Duplex motor	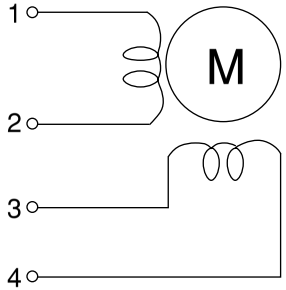	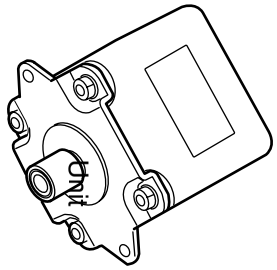	Between pin 1 and pin 2: 2.4Ω Between pin 3 and pin 4: 2.4Ω
Second tray feed motor	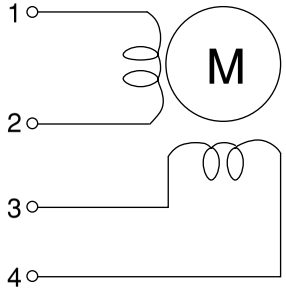	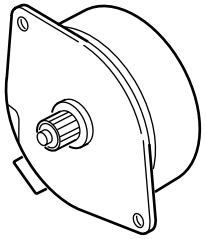	Between pin 1 and pin 2: 3.4Ω Between pin 3 and pin 4: 3.4Ω

Oki Data CONFIDENTIAL

Unit	Circuit diagram & configuration	Part schematic	Resistance value
Fuser unit	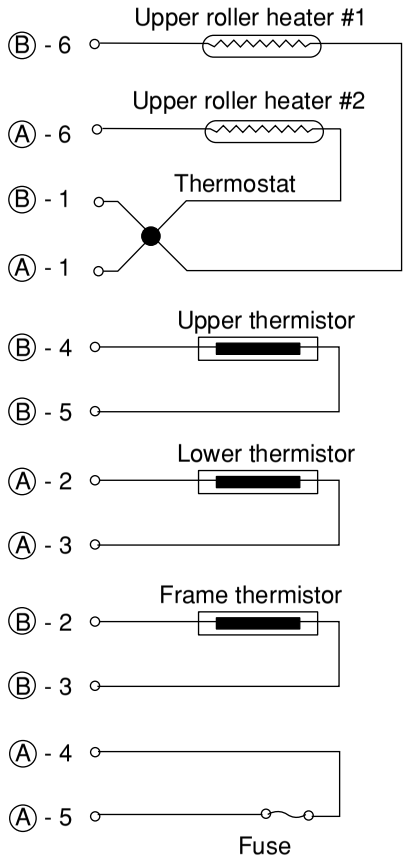	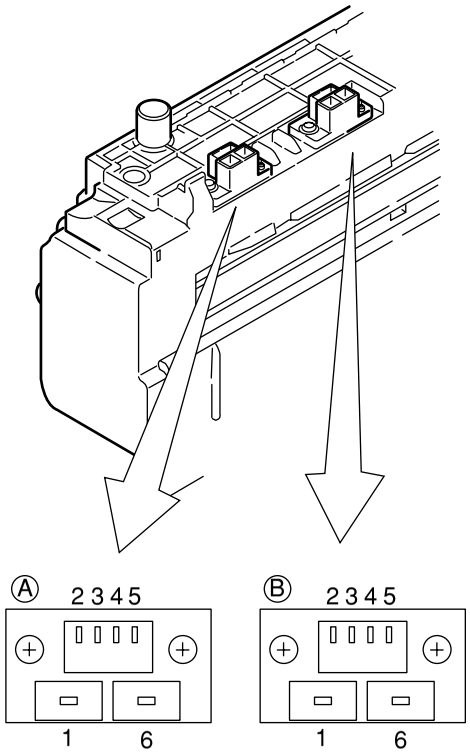	Between pin Ⓐ-1 and pin Ⓐ-6: Several ohms to several tens of ohms Between pin Ⓑ-1 and pin Ⓑ-6: Several ohms to several tens of ohms Between pin Ⓑ-4 and pin Ⓑ-5: Approx. 590Kohms to 5338Kohms (0-93) Between pin Ⓐ-2 and pin Ⓐ-3: Approx. 104.5Kohms to 806.5Kohms (0-43ßC) Between pin Ⓑ-2 and pin Ⓑ-3: Approx. 104.5Kohms to 806.5Kohms (0-43ßC) Between pin Ⓐ-4 and pin Ⓐ-5: Open

Oki Data CONFIDENTIAL

8.2 Component layout

(1) Print engine controller PCB (PU PCB)

Component side

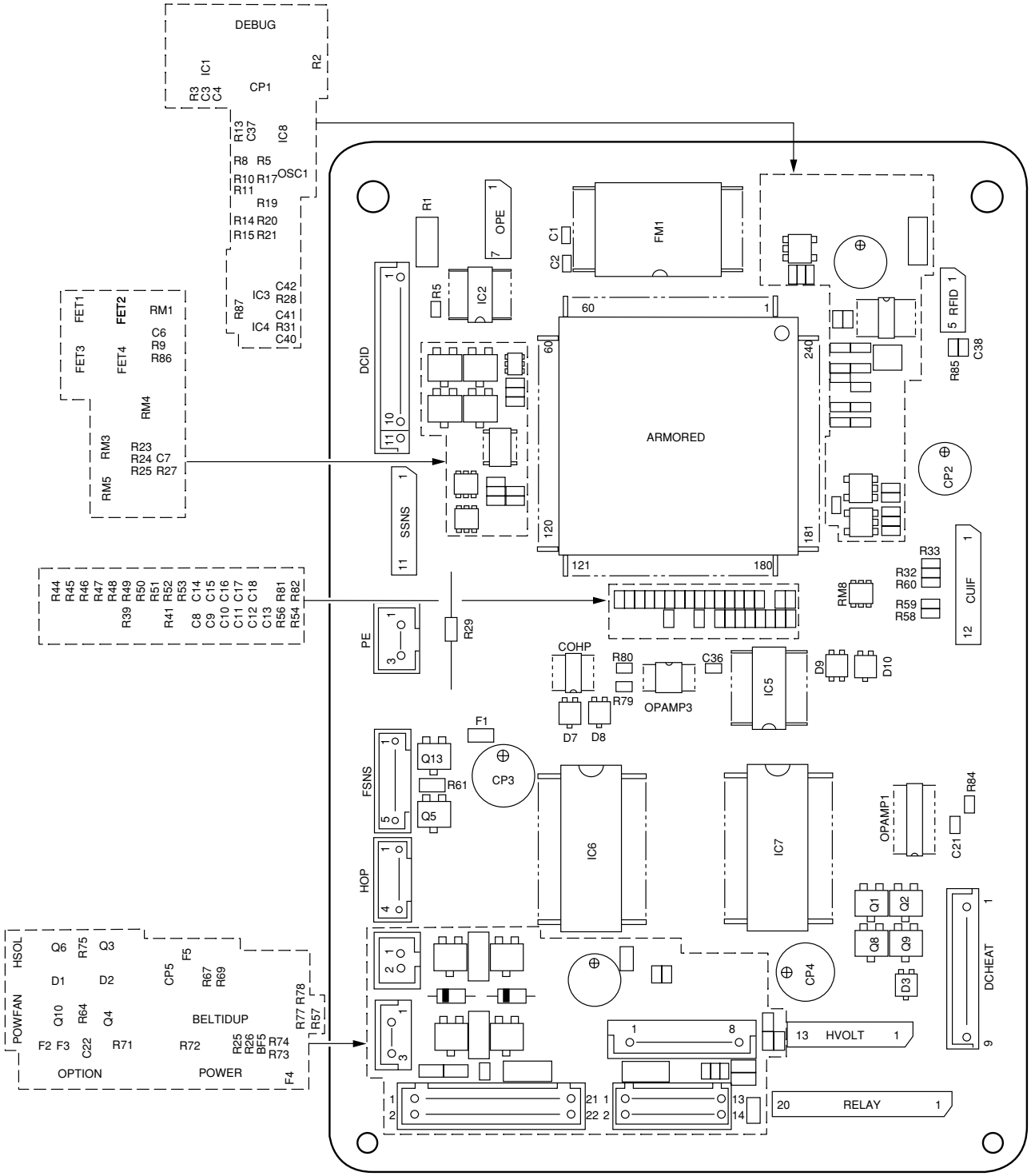

Solder side

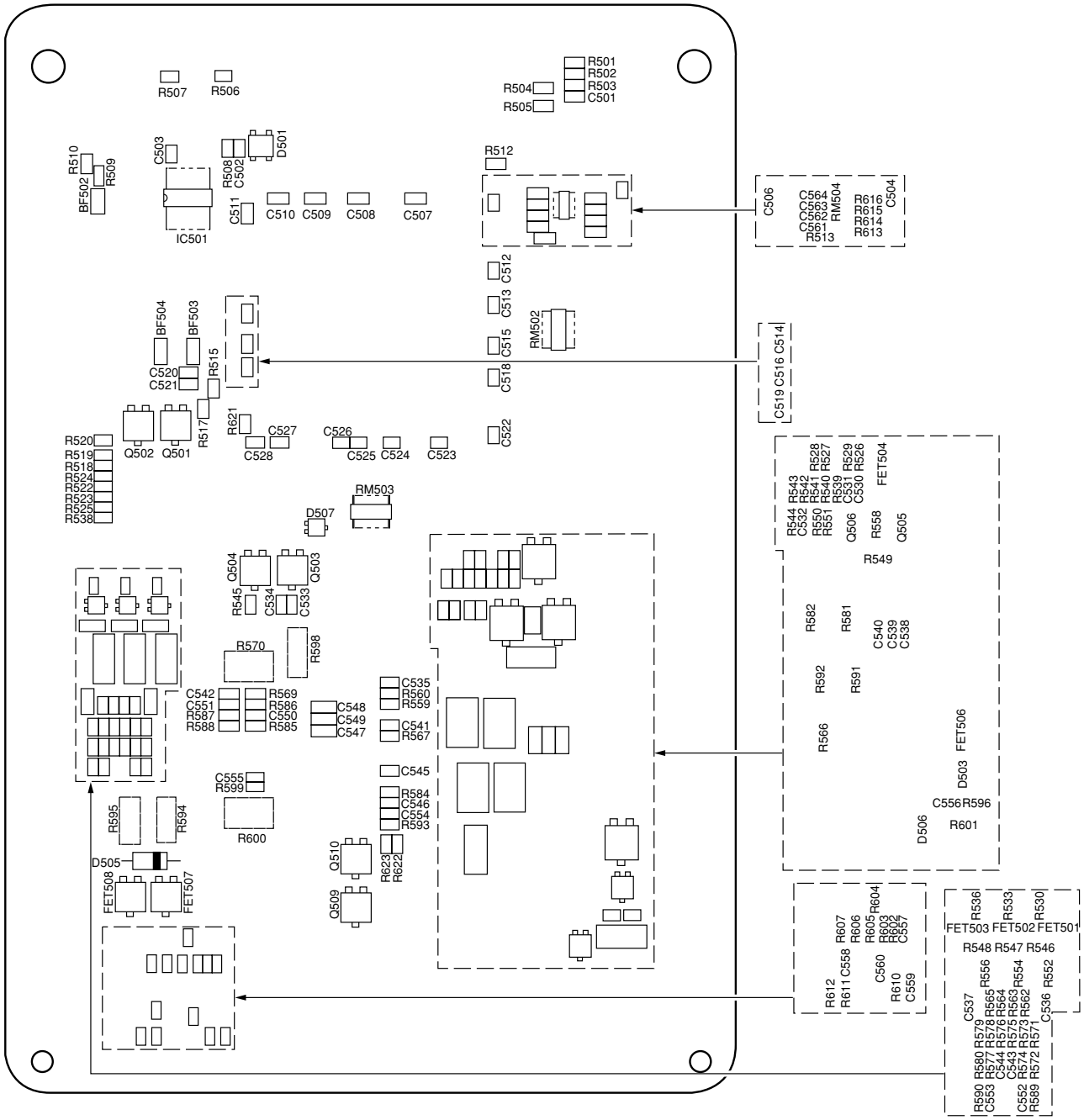
R507
R506
R501
R502
R503
C501
R504
R505
R510
BF502
R509
C503
R508
C502
D501
IC501
C511
C510
C509
C508
C507
R512
C506
C564
C563
C562
C561
R513
RM504
R616
R615
R614
R613
C504
C512
C513
C515
C518
C522
RM502
C519 C516 C514
BF504
BF503
C520
C521
R515
R517
R621
C527
C528
C526
C525
C524
C523
Q502
Q501
R520
R519
R518
R524
R522
R523
R525
R538
RM503
D507
R543
R542
R541
R540
R539
C532
C531
C530
R528
R527
R529
R526
FET504
R544
C533
R550
R551
Q506
R558
Q505
R549
Q504
Q503
R545
C534
C533
R570
R598
R582
R581
C540
C539
C538
R592
R591
C542
C551
R587
R588
R569
R586
C550
R585
C548
C549
C547
C535
R560
R559
C541
R567
R566
FET506
D503
C556
R596
D506
R601
C555
R599
C545
R584
C546
C554
R593
R600
R595
R594
D505
FET508
FET507
Q510
Q509
R623
R622
R607
R606
R605
R604
R603
R602
C557
R612
R611
C558
C560
R610
C559
R536
R533
R530
FET503
FET502
FET501
R548
R547
R546
C537
R556
R565
R564
R563
R554
R562
C536
R552
R590
R580
R579
C553
R577
R578
C544
R576
C543
R575
R573
C552
R574
R589
R572
R571

(2)-1 Main controller (PDL CU PCB)(C6150/C6050/C5950/C5750)

Component side

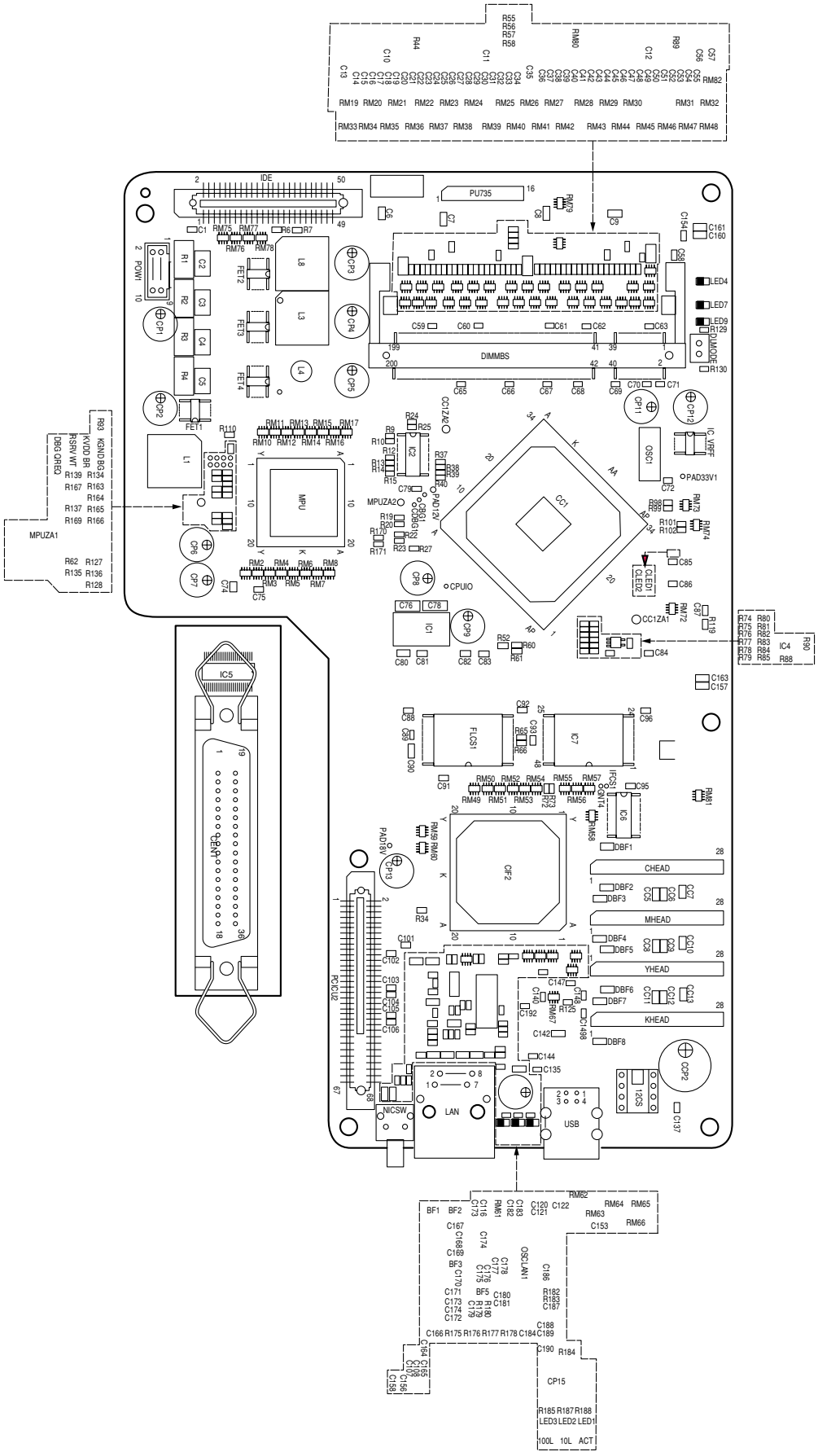

Solder side

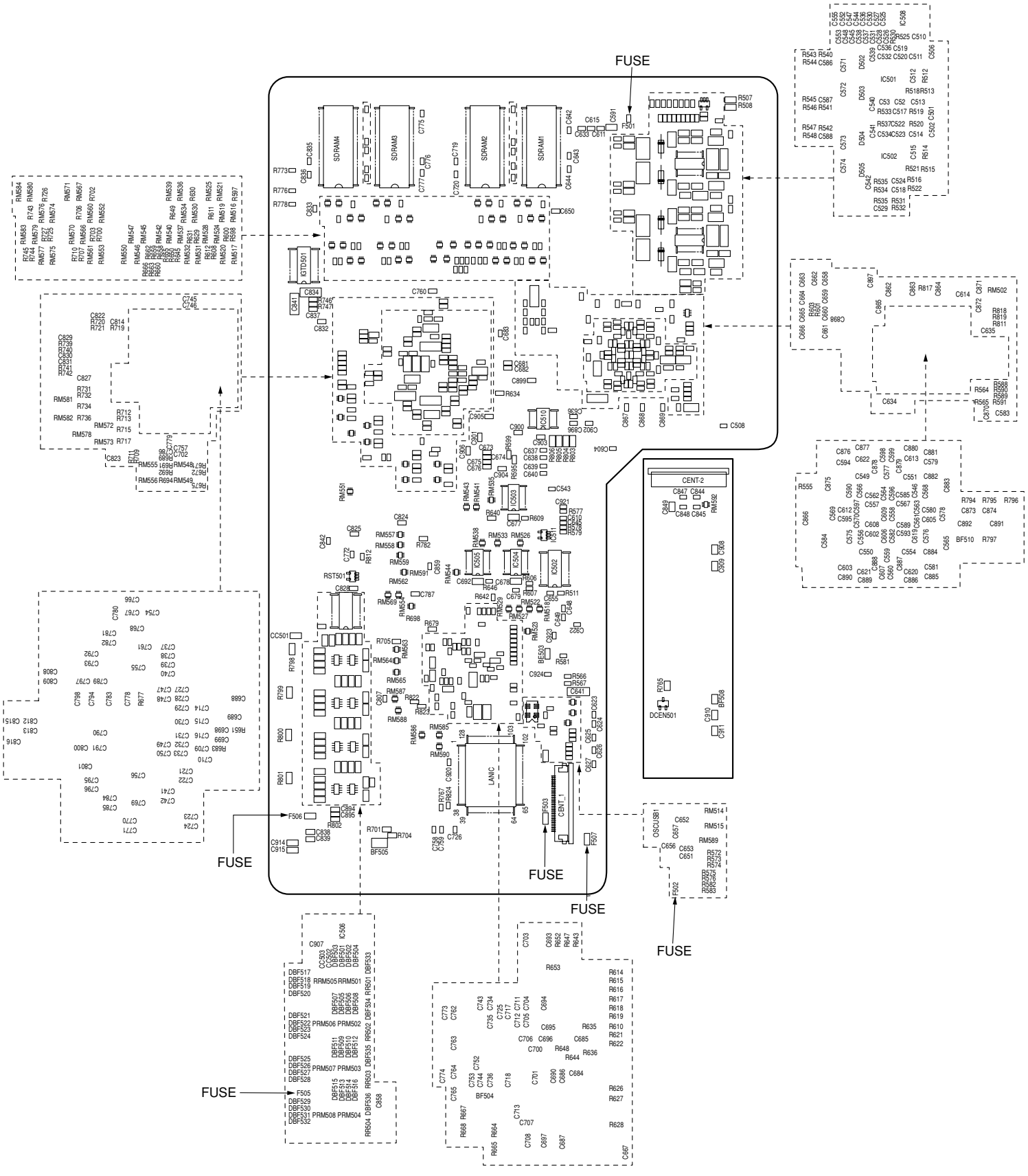
FUSE
FUSE
FUSE
FUSE
FUSE
SDRAM4
SDRAM3
SDRAM2
SDRAM1
GTD501
IC501
IC502
IC503
IC504
IC505
IC506
IC510
CENT-2
CENT_1
LANIC
OSCUSB1
DCEN501
F501
F502
F503
F505
F506

(2)-2 Main controller PCB(GDI CU PCB)(C5850/C5650)

Component side

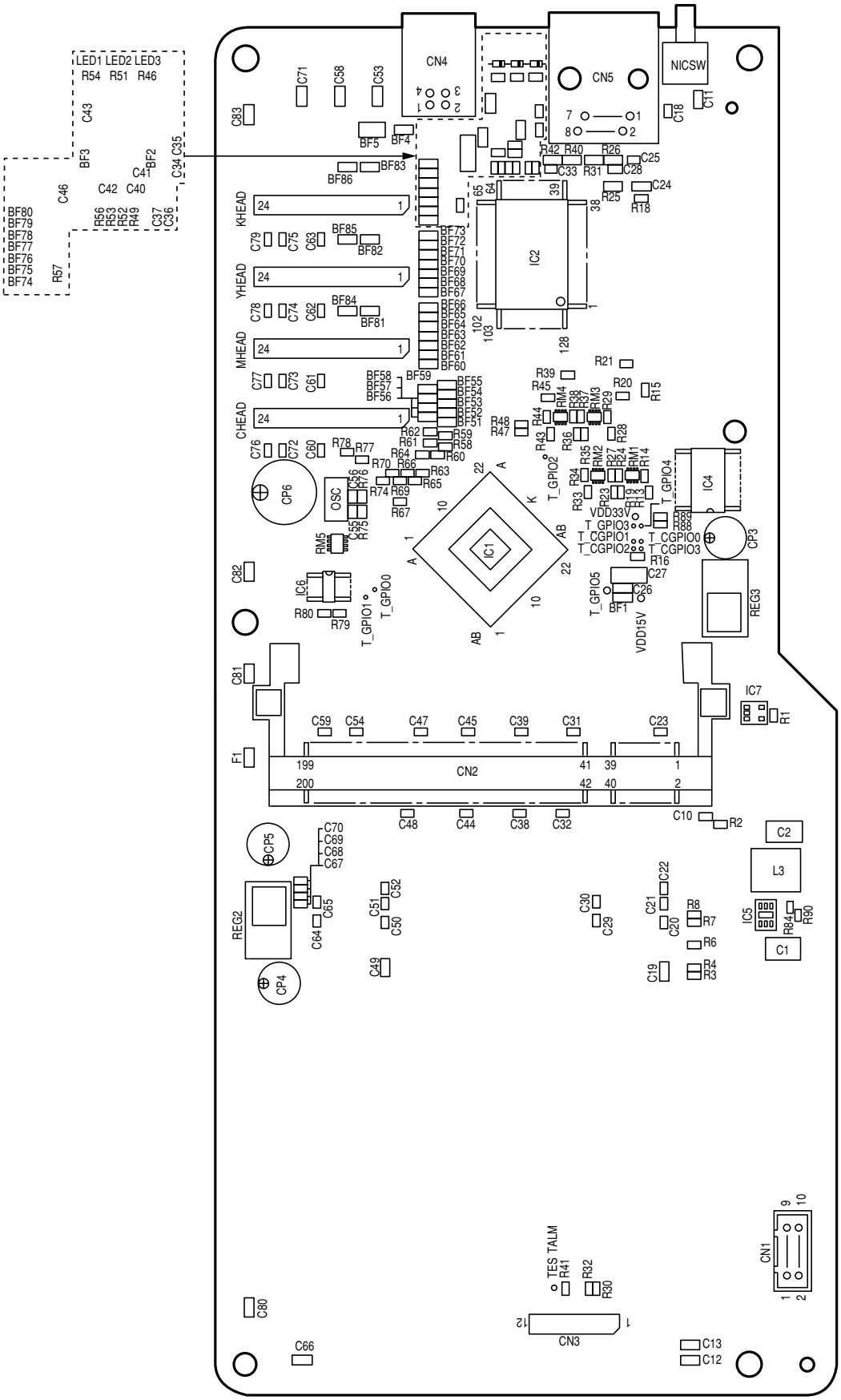

Solder side

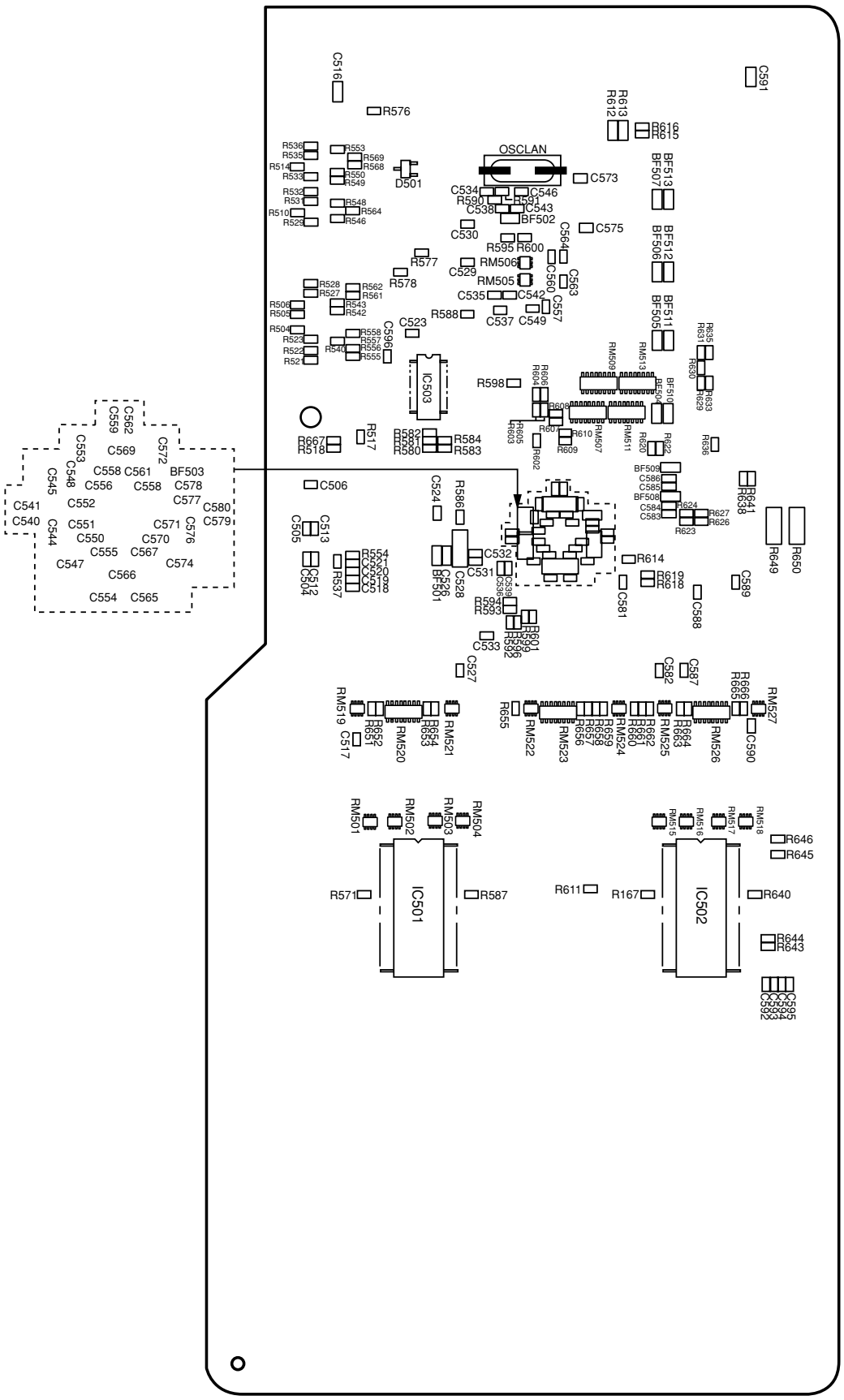
C516
R576
C591
R613
R612
R616
R615
OSCLAN
BF513
BF507
C573
D501
C534
C546
R590
R591
C538
C543
BF502
C530
C564
C575
BF512
BF506
R595
R600
R577
RM506
C529
C560
C563
R578
RM505
C535
C542
C557
BF511
BF505
R588
C537
C549
C523
C596
IC503
R598
RM509
RM513
BF510
BF504
R667
R518
R517
R584
R583
R580
C506
C524
R586
C559
C562
C553
C569
C572
C558
C561
BF503
C548
C545
C556
C558
C578
C577
C541
C552
C580
C540
C544
C551
C571
C576
C579
C550
C570
C555
C567
C547
C574
C566
C554
C565
C513
C505
C512
C504
R554
C521
C520
C518
R537
C528
C526
BF501
C532
C531
C538
R614
R619
R611
C581
C588
C589
R649
R650
R641
R638
BF509
BF508
R624
R627
R626
R623
R594
R593
R601
R589
R592
C533
C527
C582
C587
R666
R665
RM527
RM519
C517
R652
R651
RM520
R654
R653
RM521
R655
RM522
RM523
R662
R661
RM524
R664
R663
RM525
RM526
C590
RM501
RM502
RM503
RM504
IC501
R571
R587
RM515
RM516
RM517
RM518
IC502
R611
R167
R646
R645
R640
R644
R643
C595
C594
C593
C592

(3) Junction PCB

Component side

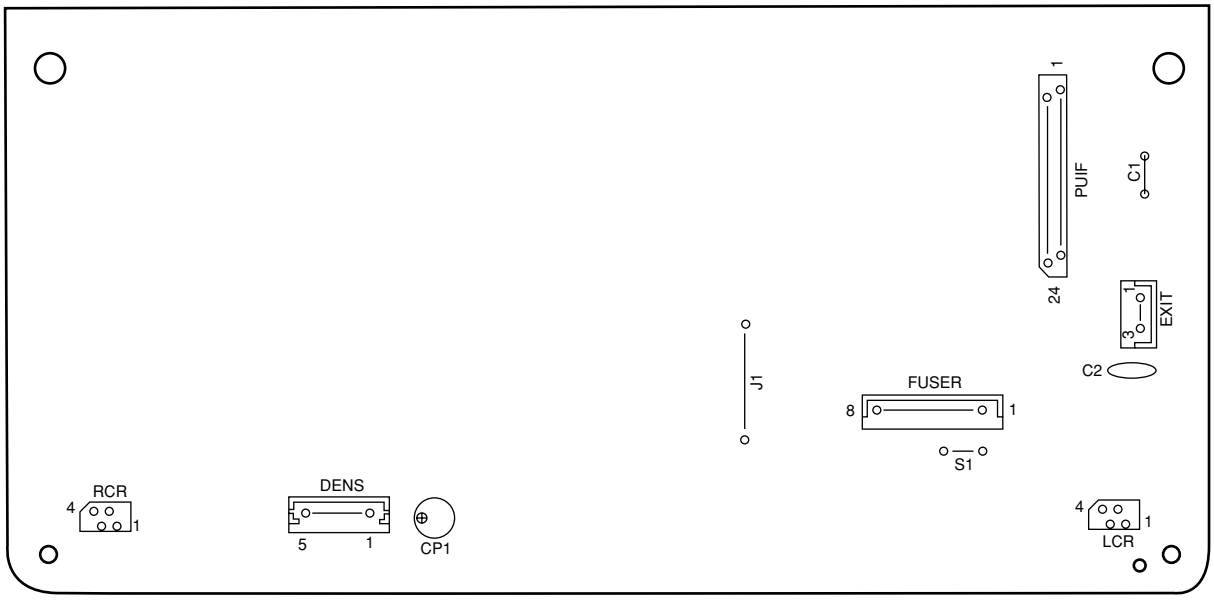

Solder side

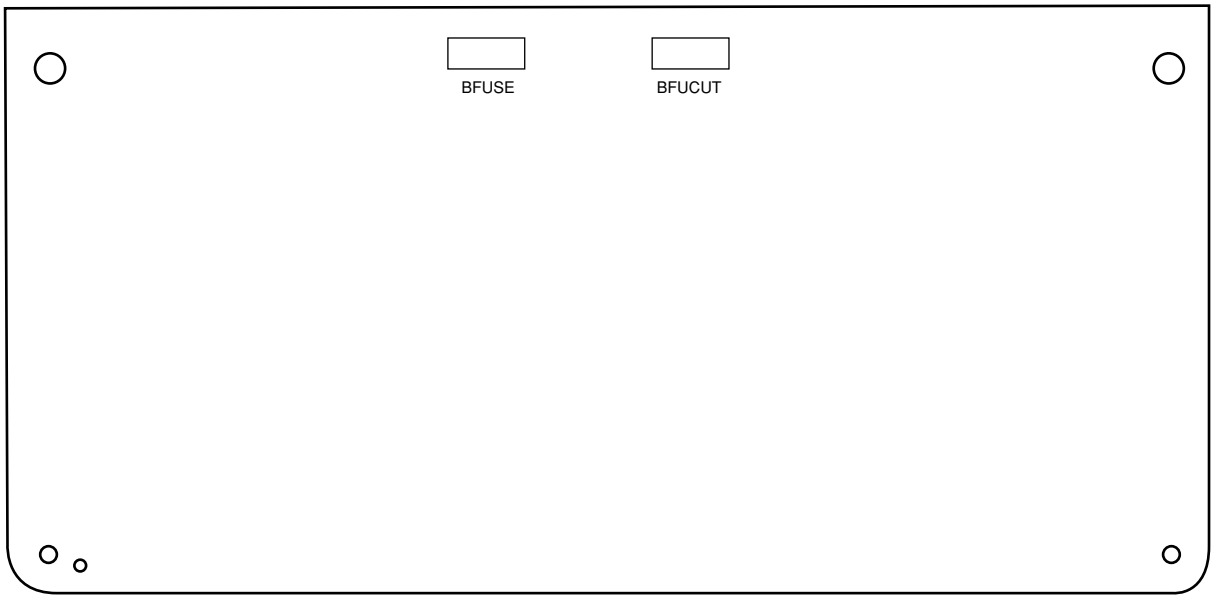

(4) Duplex print control PCB

Component side

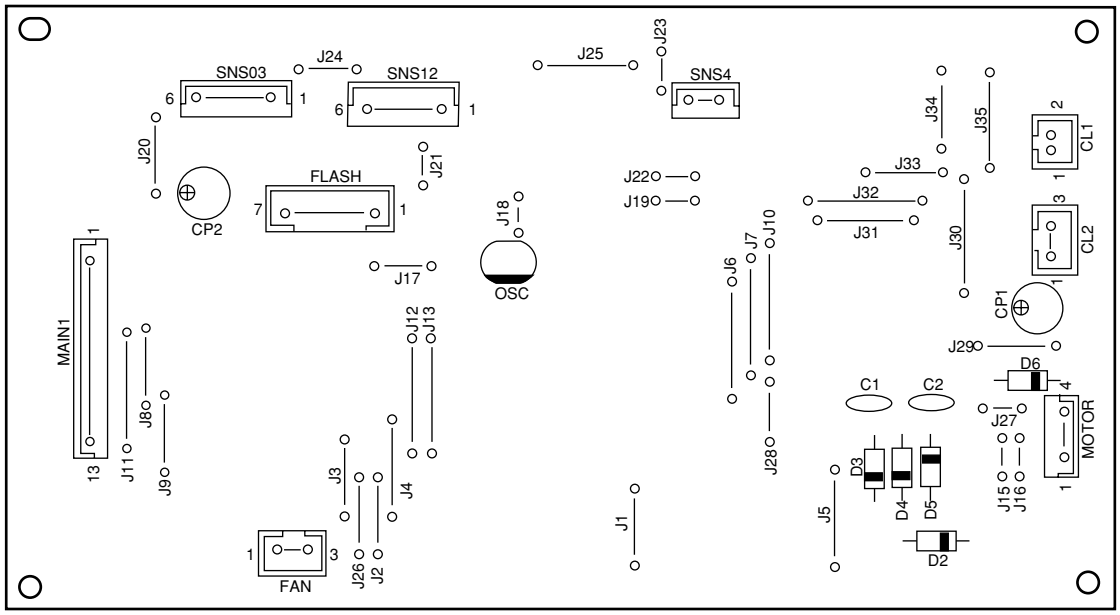

Solder side

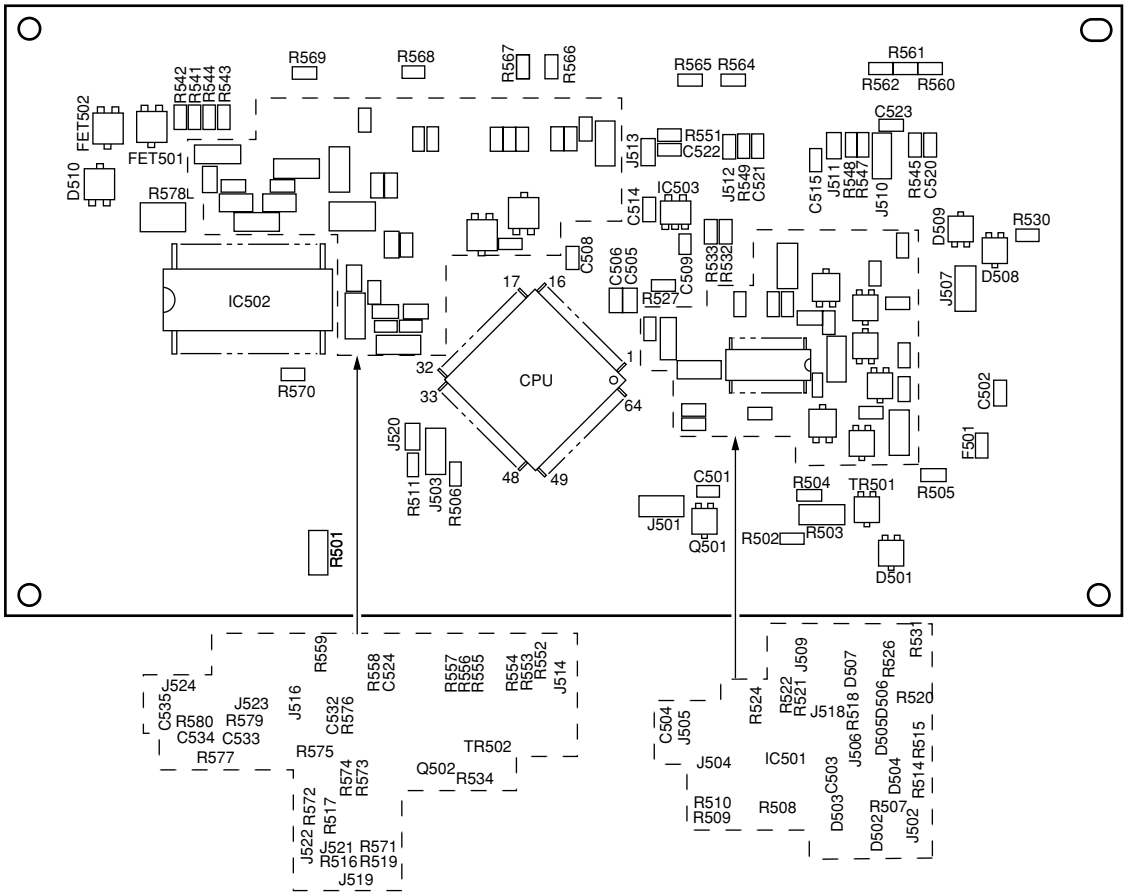

(5) Second tray control PCB

Component side

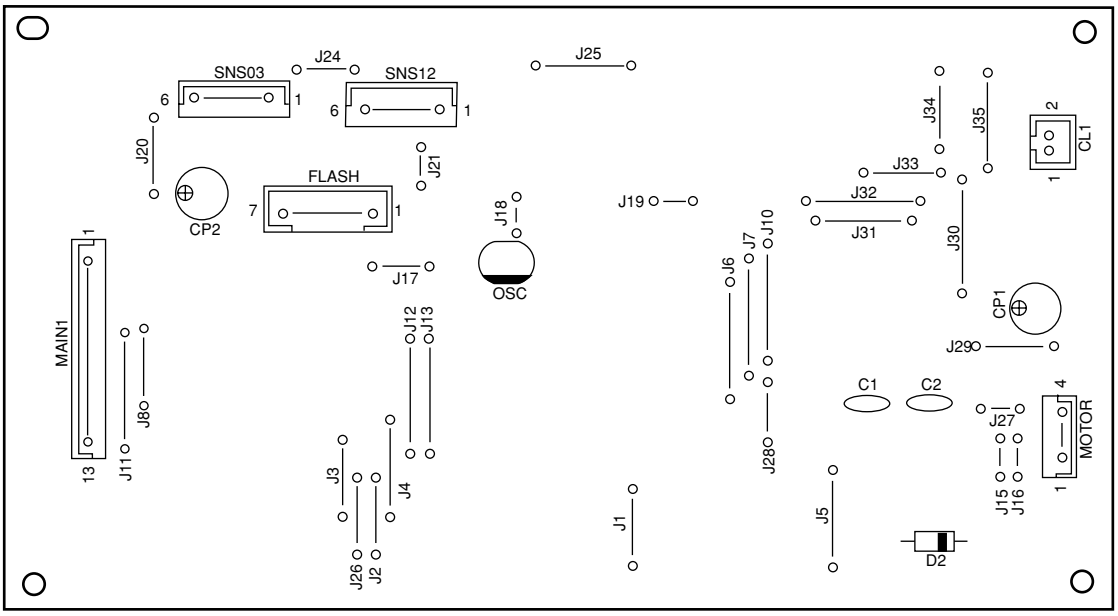

Solder side

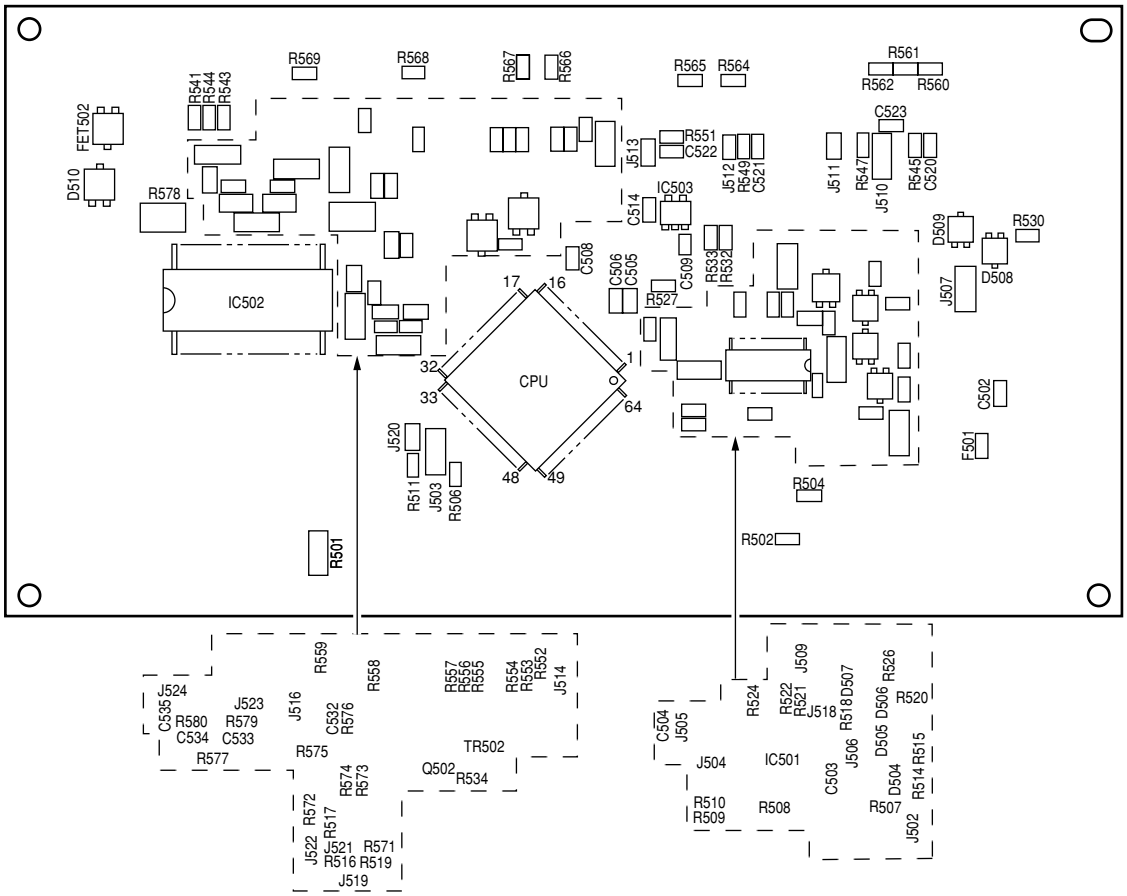

(6)-1 Operator panel PCB

Component side

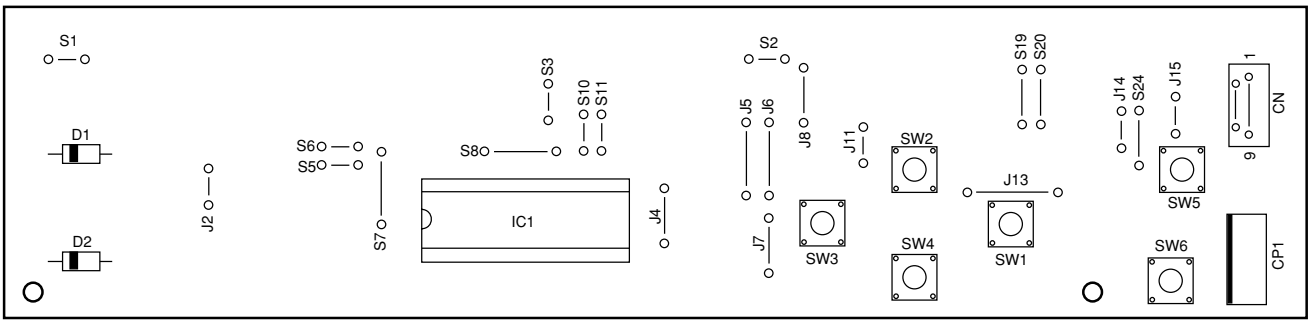

Solder side

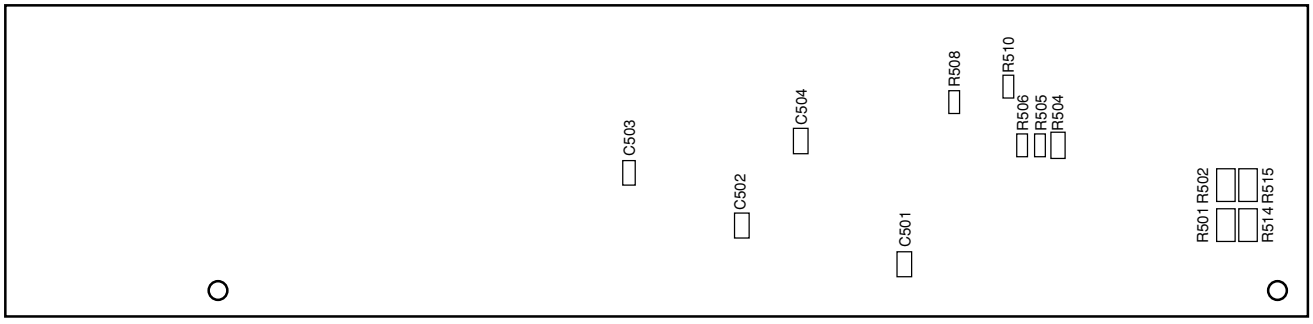

(7) Toner-Low sensor PCB

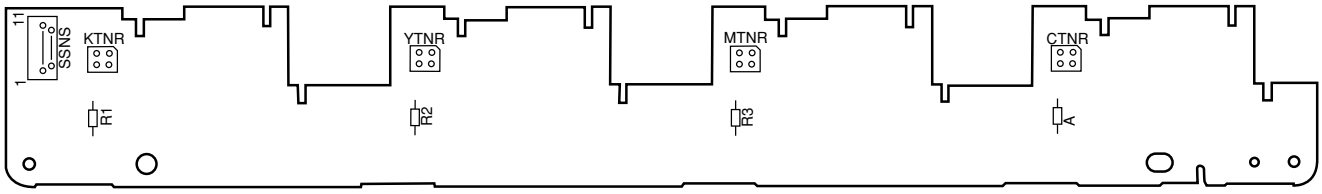

(8) Inlet sensor PCB (Front sensor PCB)

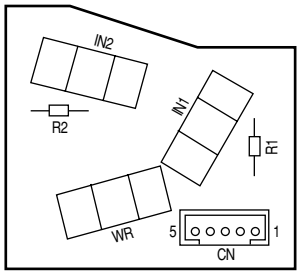

(9) Color adjustment sensor PCB

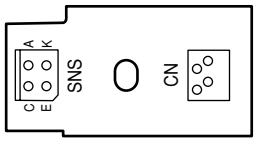

(10) High-voltage power supply PCB

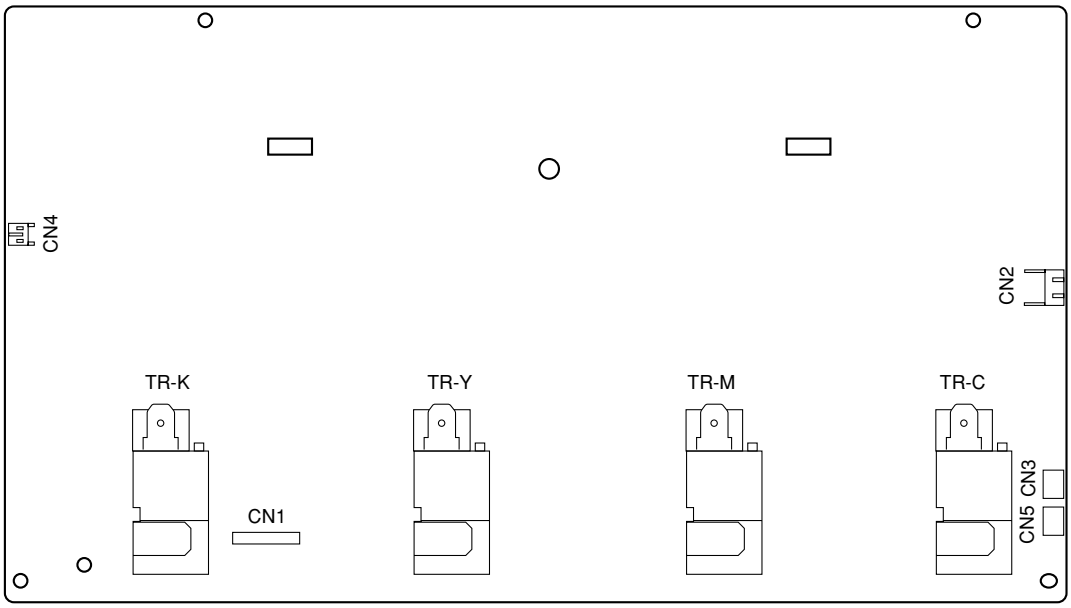

(11) Low-voltage power supply PCB

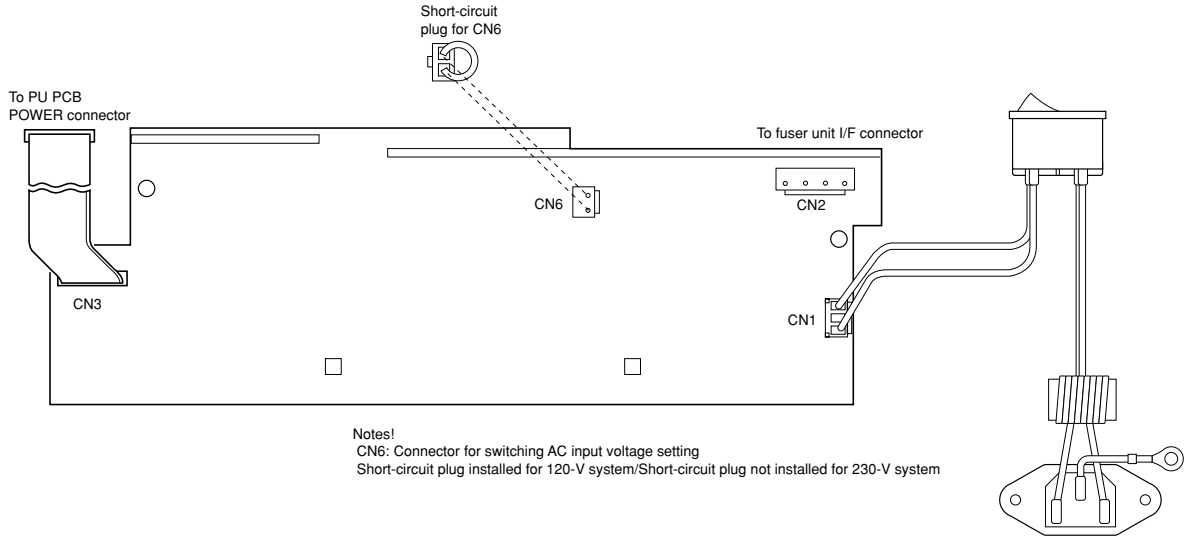

(12) ID unit

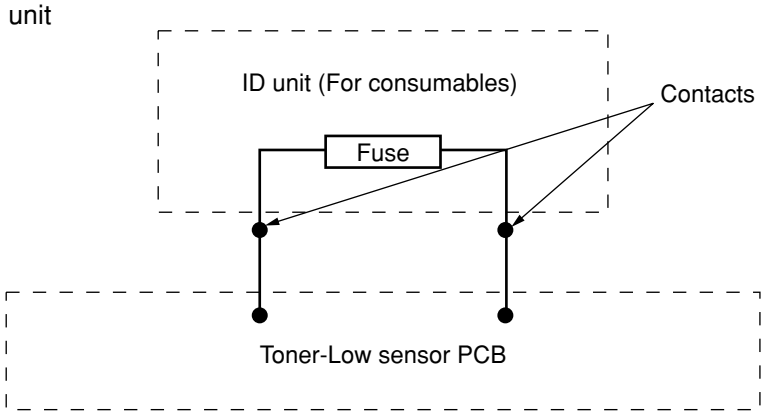

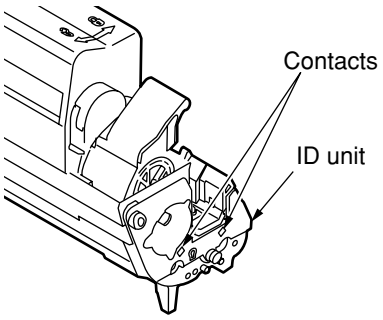

(13) Transfer belt unit

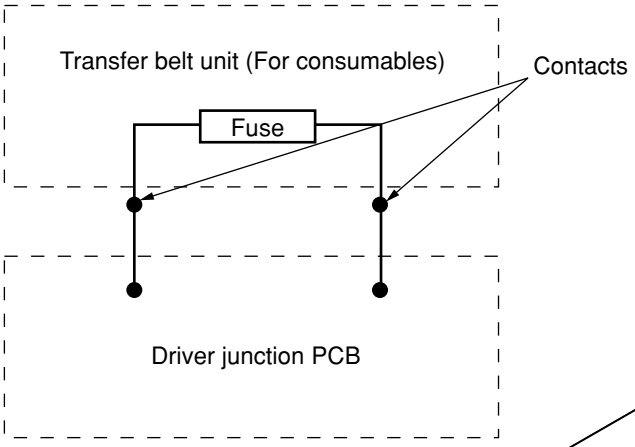

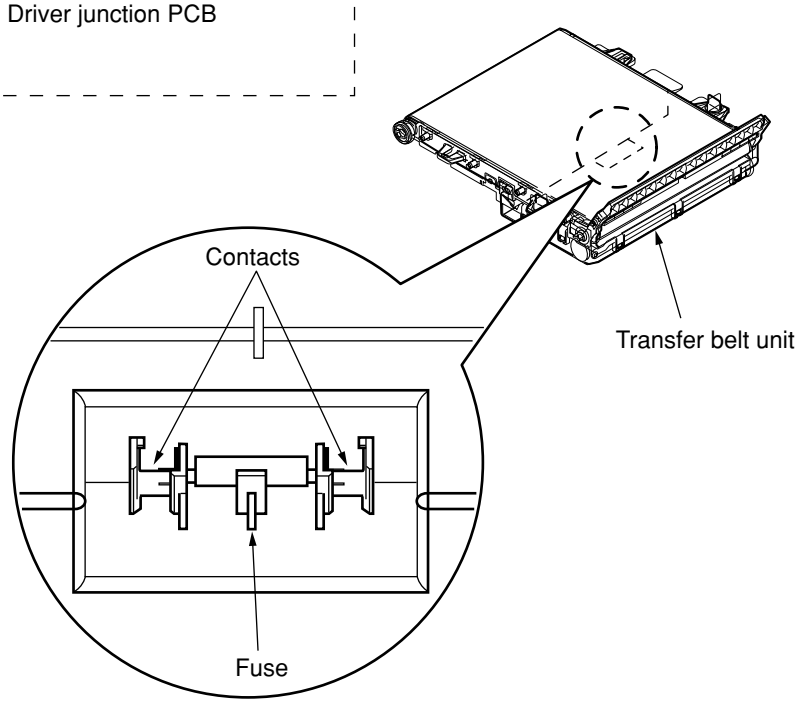

8.3 F/W version

8.3.1 ROM management number

ROM Revision	Date	DCO No.	CU F/W 43888201FY01		NIC F/W 43888201FY02			Loader 43436805FY01*		Remark
			Revision	File Rev.	NIC F/W	Web Page	File Rev.	Revision	File Rev.	
1	2007.07.13	-	N0.61	1	08.51	W8.51	1	L01.02	1	Not used
2	2007.08.08	SP6-1344	N1.01	2	08.51	W8.51	1	L01.02	1	1st lot~

*Loader can't be rewritten.

8.3.2 F/W version display in PDL CU PCB

There is a label which displays the F/W version number in the PDL CU. In case of exchange a PDL CU PCB be careful for the number of versions of F/W not to become older than before.

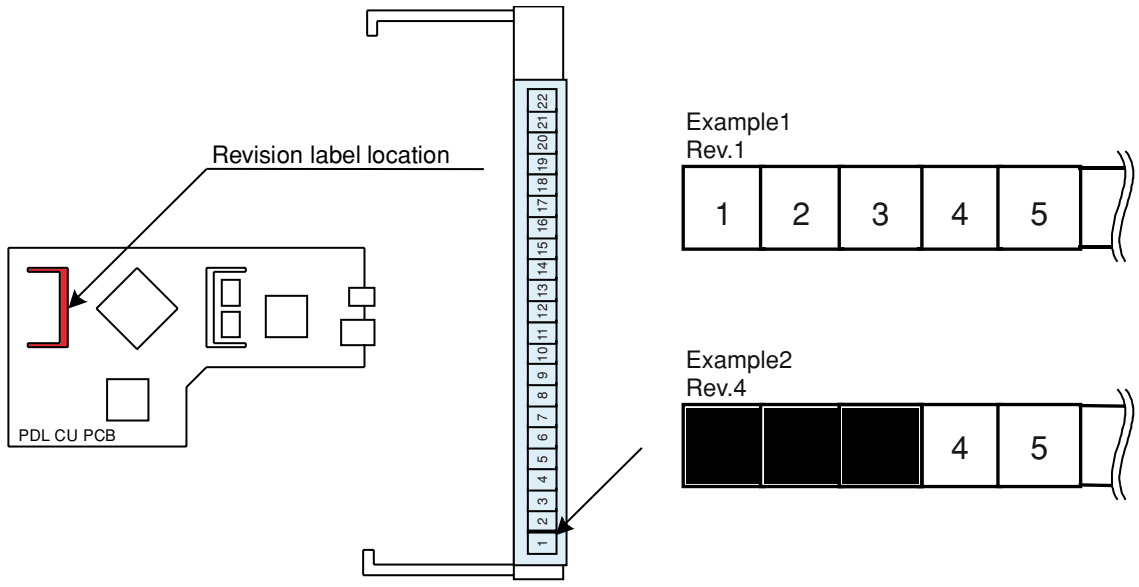

8.3.3 Stamped maintenance board parts markings

A specified number has been stamped on the maintenance part marking area of each CU-PCB according to the table below.

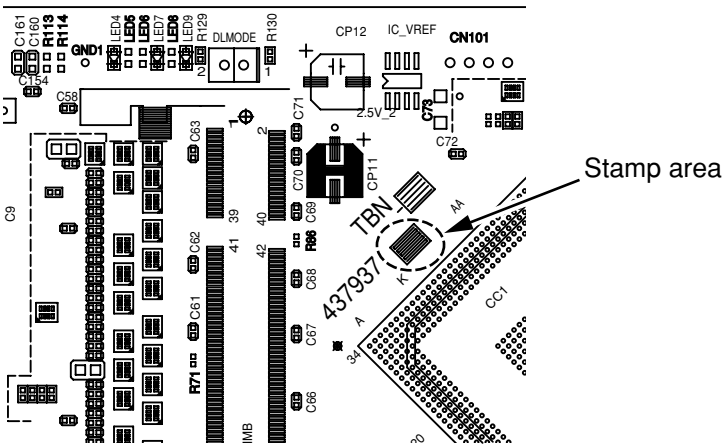

Series No.	Stamp No. (Maintenance Board Series No.)	Board TB2 (YU) Series No.	User for
01	437937[01]	TB2 (43778801)	ODA_PX745 (C6150n)
02			
03	437937[03]	TB2 (43778801)	OEL_PX745 (C5950n)
04	437937[04]	TB2 (43778801)	AOS_PX745 (C5950n)
05			
06			
07			
08			
09			
10			
11	437937[11]	TB2 (43778801)	ODA_PX745 (C5750n)
12			
13	437937[13]	TB2 (43778801)	OEL_PX745 (C5750n)
14	437937[14]	TB2 (43778801)	AOS_PX745 (C5750n)